Deye®

Hybrid Inverter

SUN-29.9K-SG01HP3-EU-BM3

SUN-30K-SG01HP3-EU-BM3

SUN-35K-SG01HP3-EU-BM3

SUN-40K-SG01HP3-EU-BM4

SUN-50K-SG01HP3-EU-BM4

User Manual

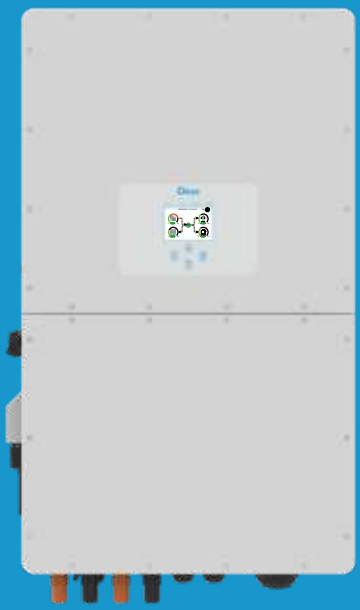

Contents

1. Safety Introductions 01
2. Product instructions 01-05
2.1 Product Overview
2.2 Product Size
2.3 Product Features
2.4 Basic System Architecture
2.5 Product handling requirements
3. Installation 05-25
3.1 Parts list
3.2 Mounting instructions
3.3 Battery connection
3.4 Grid connection and backup load connection
3.5 PV Connection
3.6 CT Connection
3.6.1 Meter Connection
3.7 Earth Connection(mandatory)
3.8 WIFI Connection
3.9 Wiring System for Inverter
3.10 Wiring diagram
3.11 Typical application diagram of diesel generator
3.12 phase parallel connection diagram
4. OPERATION 26
4.1 Power ON/OFF
4.2 Operation and Display Panel
5. LCD Display Icons 27-39
5.1 Main Screen
5.2 Solar Power Curve
5.3 Curve Page-Solar & Load & Grid
5.4 System Setup Menu
5.5 Basic Setup Menu
5.6 Battery Setup Menu
5.7 System Work Mode Setup Menu
5.8 Grid Setup Menu
5.9 Generator Port Use Setup Menu
5.10 Advanced Function Setup Menu
5.11 Device Info Setup Menu
6. Mode 39-40
7. Limitation of Liability 40-44
8. Datasheet 45-46
9. Appendix I 47-48
10. Appendix II 49

About This Manual

The manual mainly describes the product information, guidelines for installation, operation and maintenance. The manual cannot include complete information about the photovoltaic (PV) system.

How to Use This Manual

Read the manual and other related documents before performing any operation on the inverter. Documents must be stored carefully and be available at all times.

Contents may be periodically updated or revised due to product development. The information in this manual is subject to change without notice. The latest manual can be acquired via service@deye.com.cn

1. Safety Introductions

· This chapter contains important safety and operating instructions. Read and keep this manual for future reference.
· Before using the inverter, please read the instructions and warning signs of the battery and corresponding sections in the instruction manual.
· Do not disassemble the inverter. If you need maintenance or repair, take it to a professional service center.
· Improper reassembly may result in electric shock or fire.
· To reduce risk of electric shock, disconnect all wires before attempting any maintenance or cleaning. Turning off the unit will not reduce this risk.
· Caution: Only qualified personnel can install this device with battery.
· Never charge a frozen battery.
· For optimum operation of this inverter, please follow required specification to select appropriate cable size. It is very important to correctly operate this inverter.
· Be very cautious when working with metal tools on or around batteries. Dropping a tool may cause a spark or short circuit in batteries or other electrical parts, even cause an explosion.
· Please strictly follow installation procedure when you want to disconnect AC or DC terminals. Please refer to "Installation" section of this manual for the details.
· Grounding instructions - this inverter should be connected to a permanent grounded wiring system. Be sure to comply with local requirements and regulation to install this inverter.
· Never cause AC output and DC input short circuited. Do not connect to the mains when DC input short circuits.

2. Product Introduction

This is a multifunctional inverter, combining functions of inverter, solar charger and battery charger to offer uninterruptible power support with portable size. Its comprehensive LCD display offers user configurable and easy accessible button operation such as battery charging, AC/solar charging, and acceptable input voltage based on different applications.

2.1 Product Overview

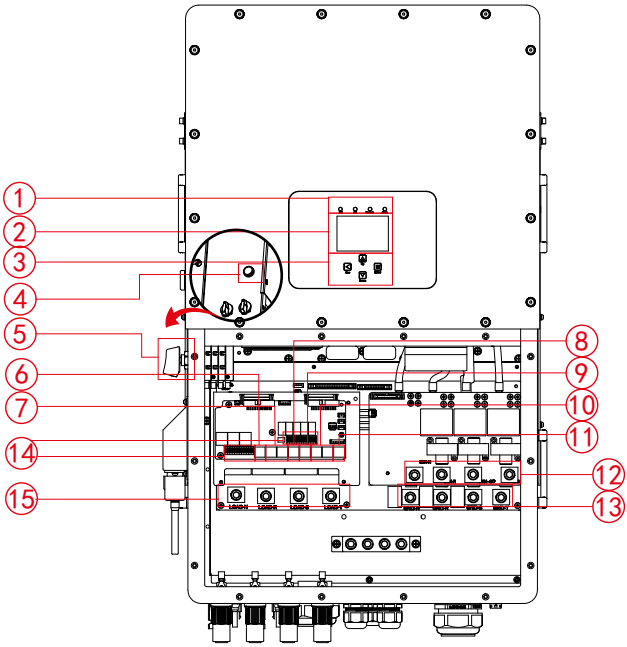

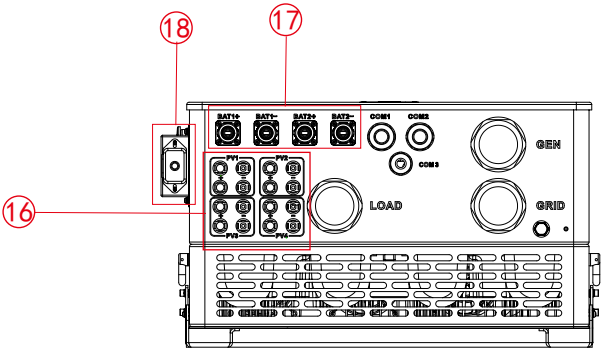

1: Inverter indicators
2: LCD display
3: Function buttons
4: Power on/off button
5: DC switch
6: Meter port
7: Parallel port
8: CAN port
9: DRM port
10: BMS port
11: RS485 port
12: Generator input
13: Grid
14: Function port
15: Load
16: PV input
17: Battery input
18: WiFi Interface

2.2 Product Size

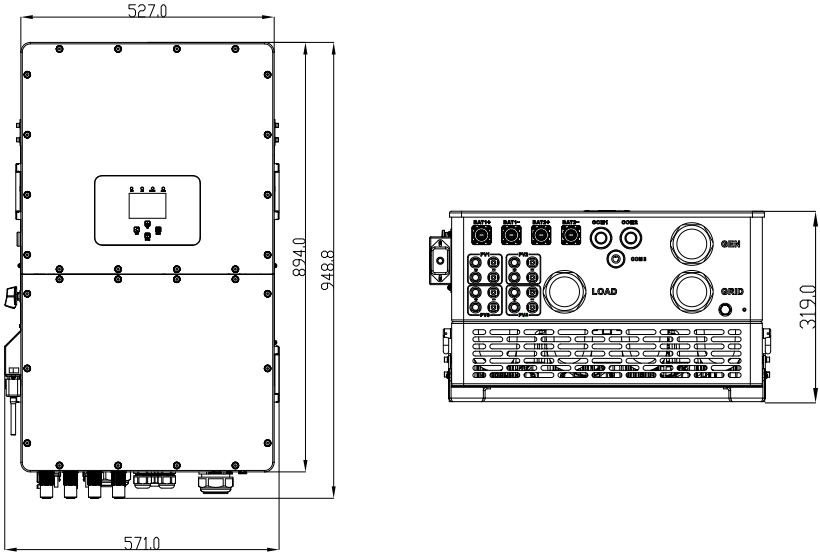

Inverter Size

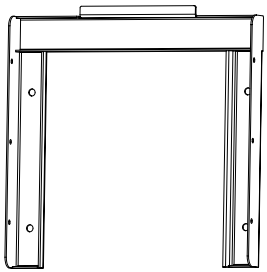

Mounting bracket

2.3 Product Features

- 230V/400V Three phase Pure sine wave inverter.
- Self-consumption and feed-in to the grid.
- Auto restart while AC is recovering.
- Programmable supply priority for battery or grid.
- Programmable multiple operation modes: On grid, off grid and UPS.
- Configurable battery charging current/voltage based on applications by LCD setting.
- Configurable AC/Solar/Generator Charger priority by LCD setting.
- Compatible with mains voltage or generator power.
- Overload/over temperature/short circuit protection.
- Smart battery charger design for optimized battery performance
- With limit function, prevent excess power overflow to the grid.
- Supporting WIFI monitoring and build-in 2 strings for 1 MPP tracker, 1 string for 1 MPP tracker.
- Smart settable three stages MPPT charging for optimized battery performance.
- Time of use function.
- Smart Load Function.

2.4 Basic System Architecture

The following illustration shows basic application of this inverter.
It also includes following devices to have a complete running system.
- Generator or Utility
- PV modules

Consult with your system integrator for other possible system architectures depending on your requirements.
This inverter can power all kinds of appliances in home or office environment, including motor type appliances such as refrigerator and air conditioner.

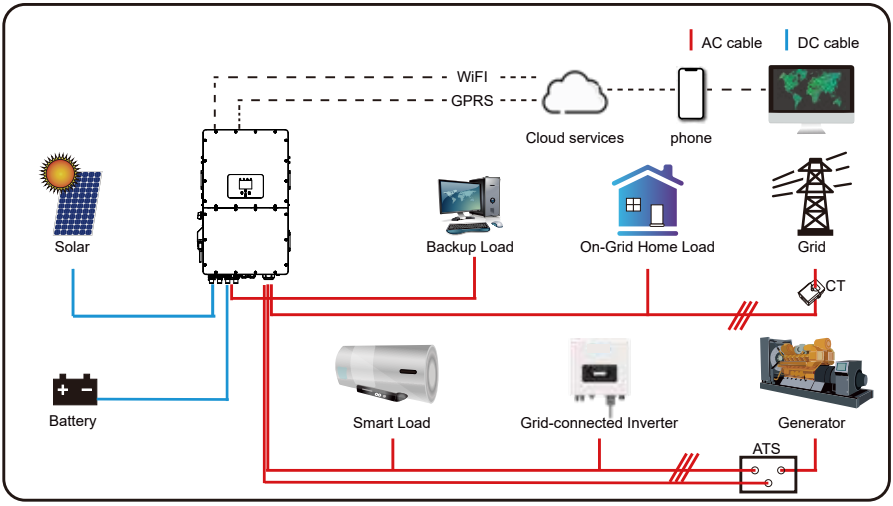

2.5 Product handling requirements

Two people stand on both sides of the machine, holding two handles to lift the machine.

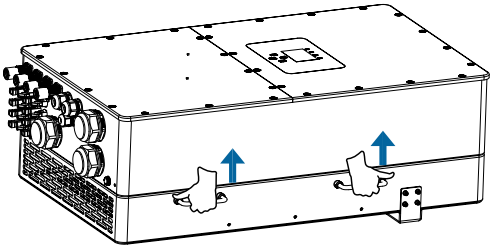

transport

3. Installation

3.1 Parts List

Check the equipment before installation. Please make sure nothing is damaged in the package. You should have received the items in the following package:

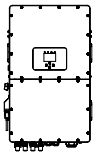

Hybrid inverter x1

Wall mounting bracket x1

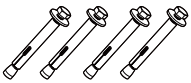

Stainless steel anti-collision bolt M12×60 x4

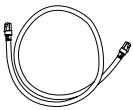

Parallel communication cable x2

L-type Hexagon wrench x1

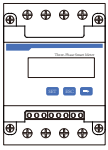

Meter(optional) x 1

User manual x1

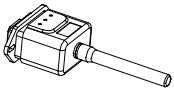

Wi-Fi-Plug(optional) x1

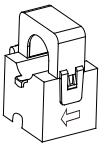

Sensor Clamp x 3

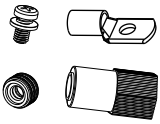

Battery Plug connectors accessories x4

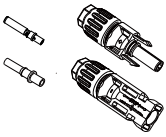

DC+/DC- Plug connectors including metal terminal xN

T-type wrench x1

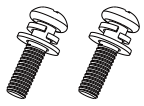

Stainless steel mounting screws M4*12 x2

3.2 Mounting instructions

Installation Precaution

This Hybrid inverter is designed for outdoor use(IP65), Please make sure the installation site meets below conditions:

· Not in direct sunlight
· Not in areas where highly flammable materials are stored.
· Not in potential explosive areas.
· Not in the cool air directly.
· Not near the television Antenna or antenna cable.
· Not higher than altitude of about 2000 meters above sea level.
· Not in environment of precipitation or humidity(>95%)

Please AVOID direct sunlight, rain exposure, snow laying up during installation and operation. Before connecting all wires, please take off the metal cover by removing screws as shown below:

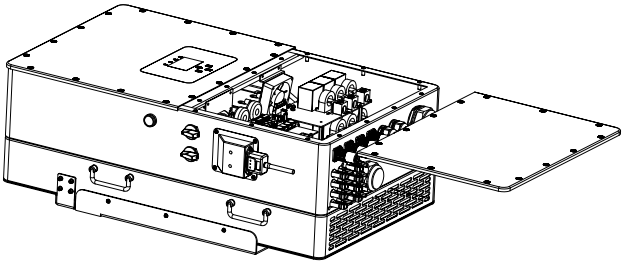

Considering the following points before selecting where to install:

· Please select a vertical wall with load-bearing capacity for installation, suitable for installation on concrete or other non-flammable surfaces,installation is shown below.
· Install this inverter at eye level in order to allow the LCD display to be read at all times.
· The ambient temperature is recommeded to be between -40~60℃ to ensure optimal operation.
· Be sure to keep other objects and surfaces as shown in the diagram to guarantee sufficient heat dissipation and have enough space for removing wires.

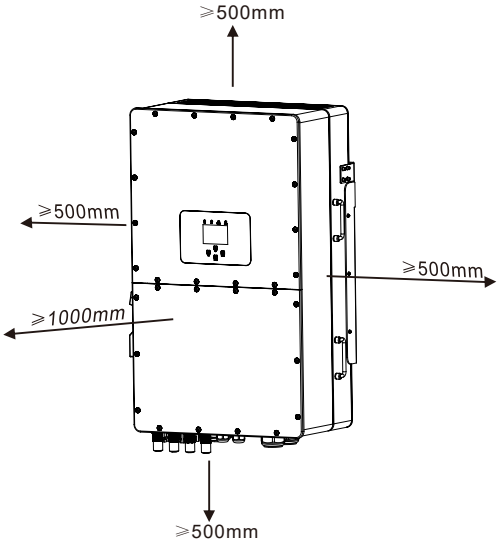

For proper air circulation to dissipate heat, allow a clearance of approx. 50cm to the side and approx. 50cm above and below the unit. And 100cm to the front.

Mounting the inverter

Remember that this inverter is heavy! Please be careful when lifting out from the package. Choose the recommend drill head(as shown in below pic) to drill 4 holes on the wall, 62-70mm deep.

1. Use a proper hammer to fit the expansion bolt into the holes.
2. Carry the inverter and holding it, make sure the hanger aim at the expansion bolt,fix the inverter on the wall.
3. Fasten the screw head of the expansion bolt to finish the mounting.

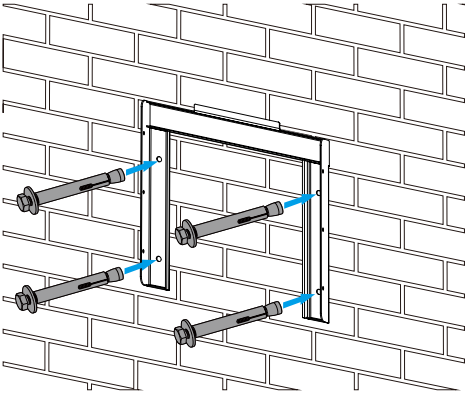

Inverter hanging plate installation

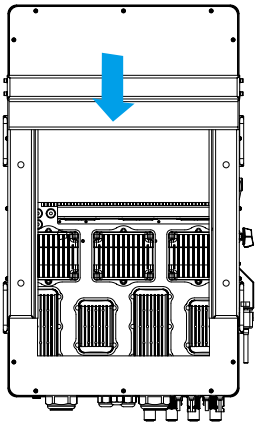

3.3 Battery connection

For safe operation and compliance, a separate DC over-current protector or disconnect device is required between the battery and the inverter. In some applications, switching devices may not be required but over-current protectors are still required. Refer to the typical amperage in the table below for the required fuse or circuit breaker size.

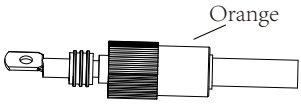

Pic 3.1 BAT+ plug connector

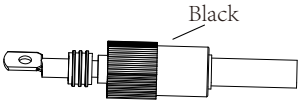

Pic 3.2 BAT- plug connector

Safety Hint:
Please use approved DC cable for battery system.

Model	***Cross section*** (mm^2)	
	Range	***Recommended value***
29.9/30/35/40/50KW	16.0~25.0 (6~4AWG)	16.0(6AWG)

Chart 3-2

The steps to assemble the battery plug connectors are listed as follows:
a) Pass the cable through the terminal. (as shown in picture 3.3)

Pic 3.3

b) Put on the rubber ring. (as shown in picture 3.4)

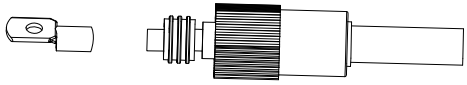

Pic 3.4

c) crimp terminals. (as shown in picture 3.5)

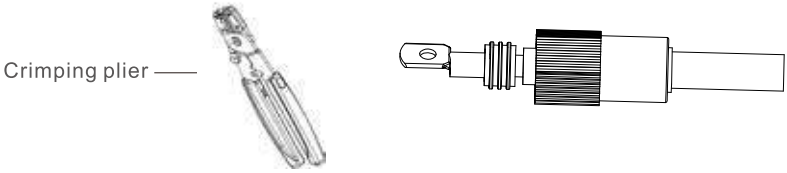

Pic 3.5

d) Fasten terminal with a bolt. (as shown in picture 3.6)

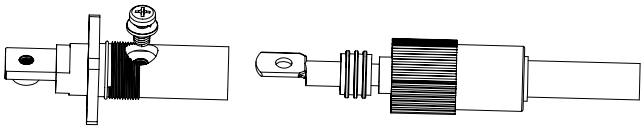

Pic 3.6

e)Fasten the terminal with outer cover. (as shown in picture 3.7)

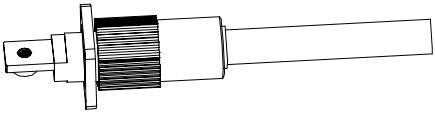

Pic 3.7

3.3.2 Function port definition

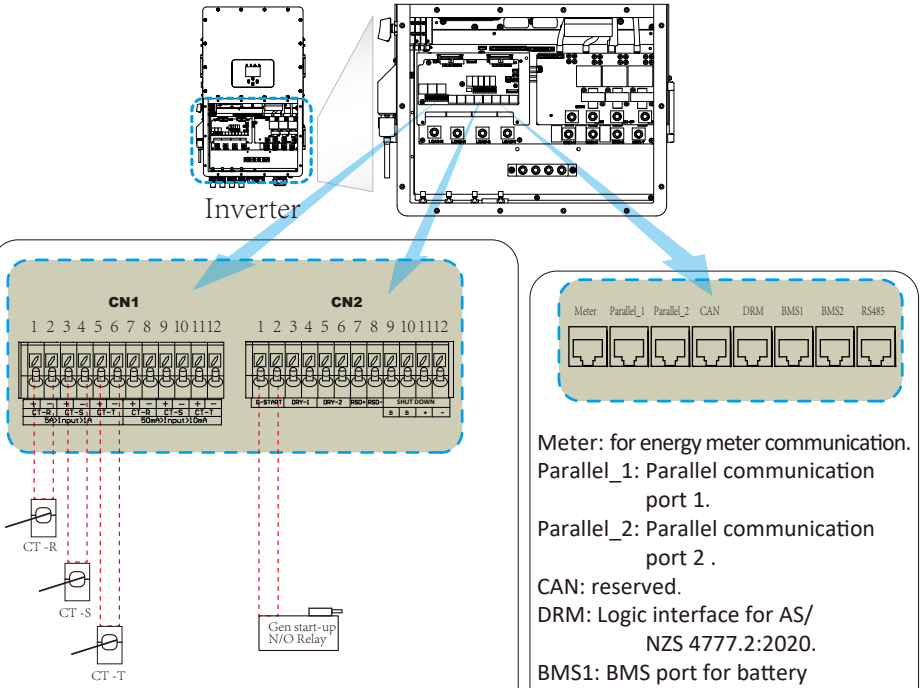

Meter: for energy meter communication.
Parallel_1: Parallel communication port 1.
Parallel_2: Parallel communication port 2 .
CAN: reserved.
DRM: Logic interface for AS/NZS 4777.2:2020.
BMS1: BMS port for battery communication port 1.
BMS2: BMS port for battery communication port 2.
RS485: RS485 port.

CN1:
CT-R (1,2,7,8): current transformer (CT-R) for“zero export to CT”mode clamps on L1 when in three phase system.
CT-S (3,4,9,10): current transformer (CT-S) for“zero export to CT”mode clamps on L2 when in three phase system.
CT-T (5,6,11,12): current transformer (CT-T) for“zero export to CT”mode clamps on L3 when in three phase system.

CN2:
G-start (1,2): dry contact signal for startup the diesel generator.
When the "GEN signal" is active, the open contact (GS) will switch on (no voltage output).
DRY-1 (3,4): Dry contact output. When the inverter is in off-grid mode and the “signal island mode" is checked, the dry contact will switch on.
DRY-2 (5,6): reserved.
RSD (7,8): When battery is connected and the inverter is in "ON" status, it will provide 12Vdc.

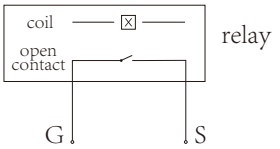

GS (diesel generator startup signal)

3.4 Grid connection and backup load connection

· Before connecting to grid, please install a separate AC breaker between inverter and grid. Also, it is recommended that installs an AC breaker between backup load and inverter.This will ensure the inverter can be securely disconnected during maintenance and fully protected from over current. For the 29.9/30/35/40/50KW model, the recommended AC breaker for backup load is 240A. For the 29.9/30/35/40/50KW model, the recommended AC breaker for grid is 240A.

· There are three terminal blocks with "Grid" "Load"and "GEN" markings. Please do not misconnect input and output connectors.

All wiring must be performed by a qualified personnel.It is very important for system safety and efficient operation to use appropriate cable for AC input connection. To reduce risk of injury, please use the proper recommended cable as below.

backup load connection(Copper wires)

Model	*Wire Size*	*Cable(mm²)*	*Torque value(max)*
29.9/30/35/40/50KW	4/0AWG	107	28.2Nm

Grid connection(Copper wires)

Model	*Wire Size*	*Cable(mm²)*	*Torque value(max)*
29.9/30/35/40/50KW	4/0AWG	107	28.2Nm

Chart 3-3 Recommended Size for AC wires

Please follow below steps to implement Grid, load and Gen port connection:

1. Before making Grid, load and Gen port connection, be sure to turn off AC breaker or disconnector first.
2. Remove insulation sleeve 10mm length, insert the wires according to polarities indicated on the terminal block. Make sure the connection is complete.

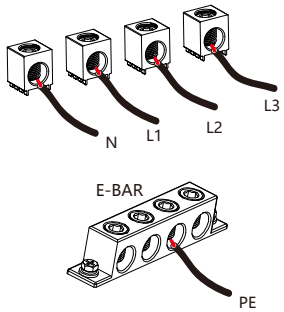

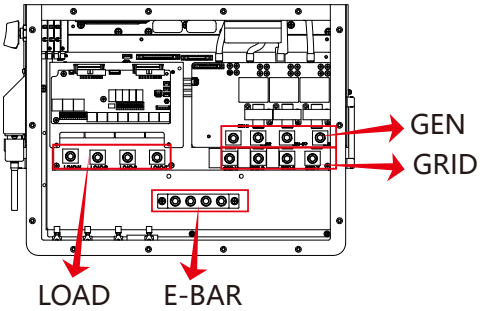

Be sure that AC power source is disconnected before attempting to wire it to the unit.

3. Then, insert AC output wires according to polarities indicated on the terminal block and tighten terminal. Be sure to connect corresponding N wires and PE wires to related terminals as well.
4. Make sure the wires are securely connected.
5. Appliances such as air conditioner are required at least 2-3 minutes to restart because it is required to have enough time to balance refrigerant gas inside of circuit. If a power shortage occurs and recovers in short time, it will cause damage to your connected appliances. To prevent this kind of damage, please check manufacturer of air conditioner if it is equipped with time-delay function before installation. Otherwise, this inverter will trigger overload fault and cut off output to protect your appliance but sometimes it still causes internal damage to the air conditioner

3.5 PV Connection

Before connecting to PV modules, please install a separately DC circuit breaker between inverter and PV modules. It is very important for system safety and efficient operation to use appropriate cable for PV module connection.

To avoid any malfunction, do not connect any PV modules with possible leakage current to the inverter. For example, grounded PV modules will cause leakage current to the inverter. When using PV modules, please ensure the PV+ & PV- of solar panel is not connected to the system ground bar.

It is requested to use PV junction box with surge protection. Otherwise, it will cause damage on inverter when lightning occurs on PV modules.

3.5.1 PV Module Selection:

When selecting proper PV modules, please be sure to consider below parameters:

1) Open circuit Voltage (Voc) of PV modules can not exceed max. PV array open circuit voltage of inverter.
2) Open circuit Voltage (Voc) of PV modules should be higher than min. start voltage.
3) The PV modules used to connected to this inverter shall be Class A rating certified according to IEC 61730.

Inverter Model	*29.9KW*	*30KW*	*35KW*	*40KW*	*50KW*
PV Input Voltage	600V (180V~1000V)				
PV Array MPPT Voltage Range	150V-850V				
No. of MPP Trackers	3			4	
No. of Strings per MPP Tracker	2+2+2			2+2+2+2	

Chart 3-5

3.5.2 PV Module Wire Connection:

1. Switch the Grid Supply Main Switch(AC)OFF.
2. Switch the DC Isolator OFF.
3. Assemble PV input connector to the inverter.

Safety Hint:
When using PV modules, please ensure the PV+ & PV- of solar panel is not connected to the system ground bar.

Safety Hint:
Before connection, please make sure the polarity of PV array matches the “DC+” and “DC-” symbols.

Safety Hint:
Before connecting inverter, please make sure the PV array open circuit voltage is within the 1000V of the inverter.

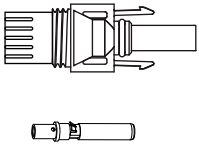

Pic 5.1 DC+ male connector

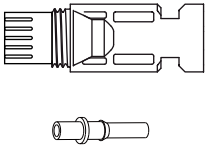

Pic 5.2 DC- female connector

Safety Hint:
Please use approved DC cable for PV system.

Cable type	***Cross section*** （mm^2）	
	Range	***Recommended value***
Industry generic PV cable (model: PV1-F)	2.5~4 (12~10AWG)	2.5(12AWG)

Chart 3-6

The steps to assemble the DC connectors are listed as follows:
a) Strip off the DC wire about 7mm, disassemble the connector cap nut (see picture 5.3).

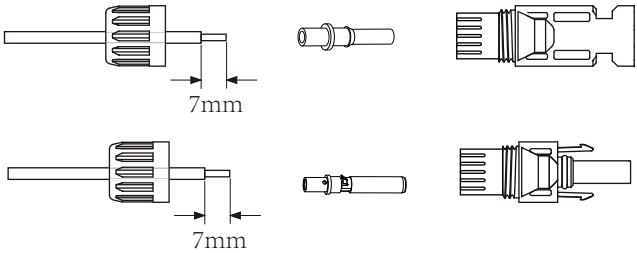

Pic 5.3 Disassemble the connector cap nut

b) Crimping metal terminals with crimping pliers as shown in picture 5.4.

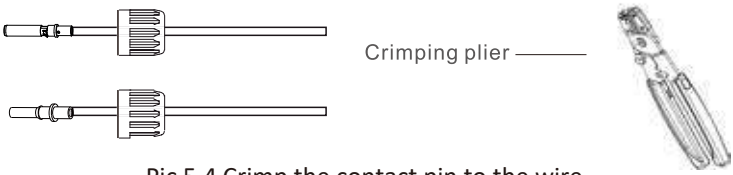

Pic 5.4 Crimp the contact pin to the wire

c) Insert the contact pin to the top part of the connector and screw up the cap nut to the top part of the connector. (as shown in picture 5.5).

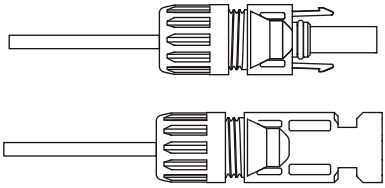

Pic 5.5 connector with cap nut screwed on

d) Finally insert the DC connector into the positive and negative input of the inverter, shown as picture 5.6

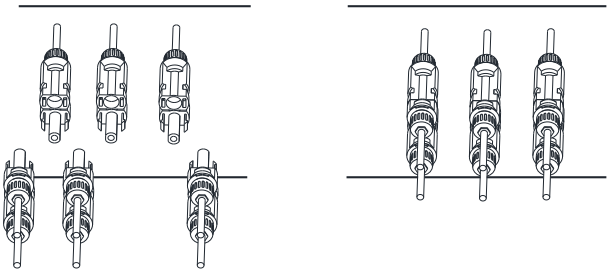

Pic 5.6 DC input connection

Warning:

Sunlight shines on the panel will generate voltage, high voltage in series may cause danger to life. Therefore, before connecting the DC input line, the solar panel needs to be blocked by the opaque material and the DC switch should be 'OFF', otherwise, the high voltage of the inverter may lead to life-threatening conditions. Please do not switch off DC isolator when the DC current when there is high voltage or current.Technicians need to wait until night to keep safety.

Warning:

Please use its own DC power connector from the inverter accessories. Do not interconnect the connectors of different manufacturers.Max. DC input current should be 20A. if exceeds, it may damage the inverter and it is not covered by Deye warranty.

3.6 CT Connection

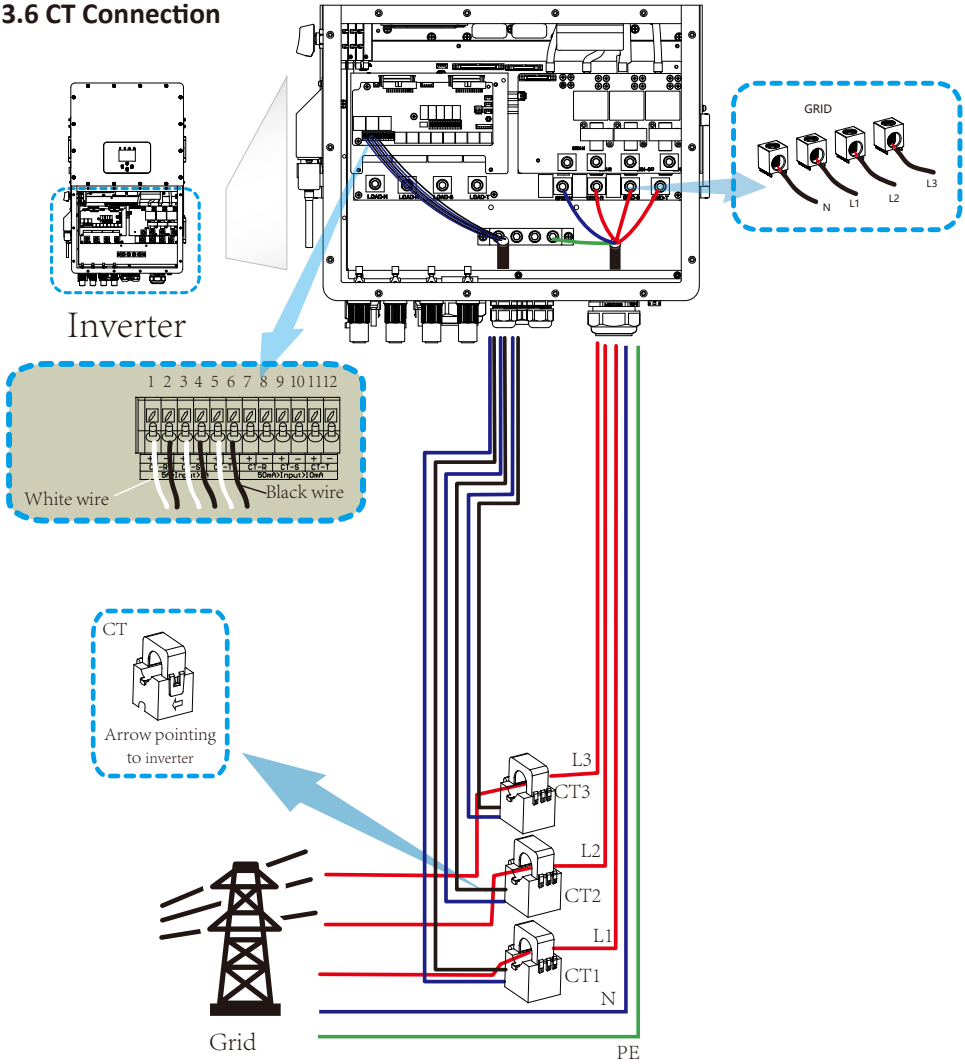

***Note： when the reading of the load power on the LCD is not correct, please reverse the CT arrow.**

3.6.1 Meter Connection

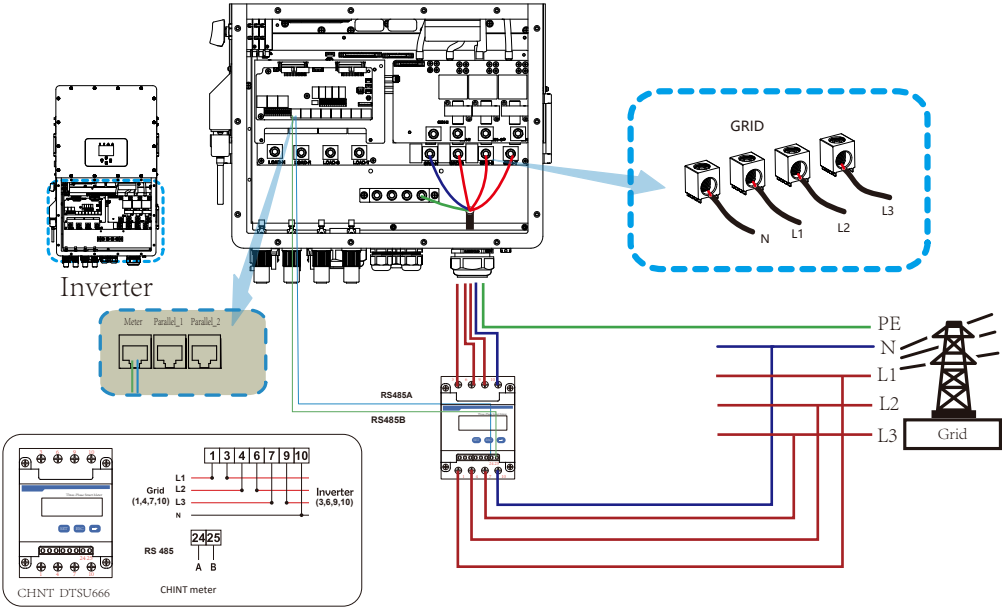

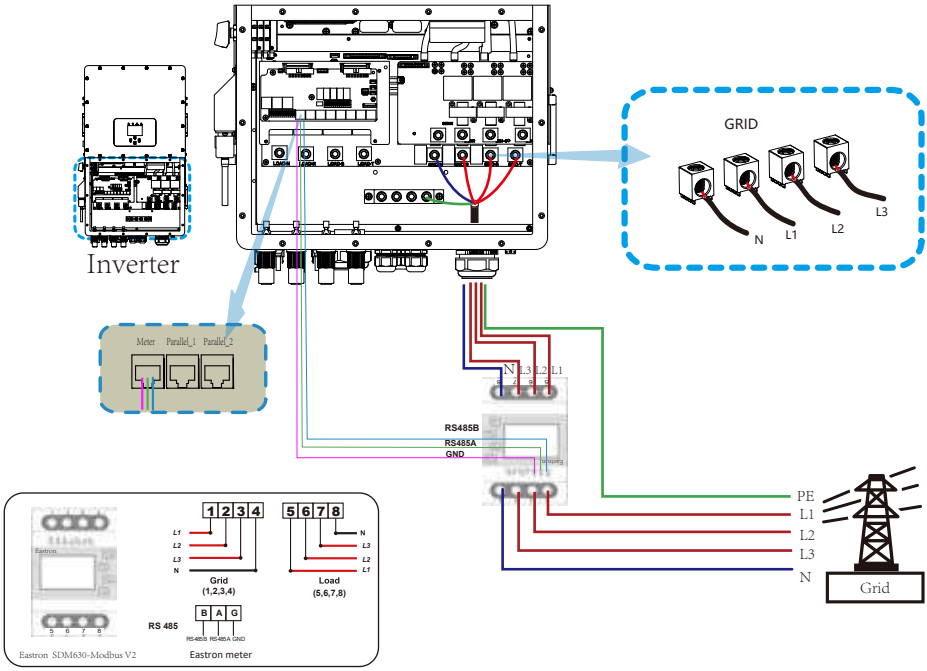

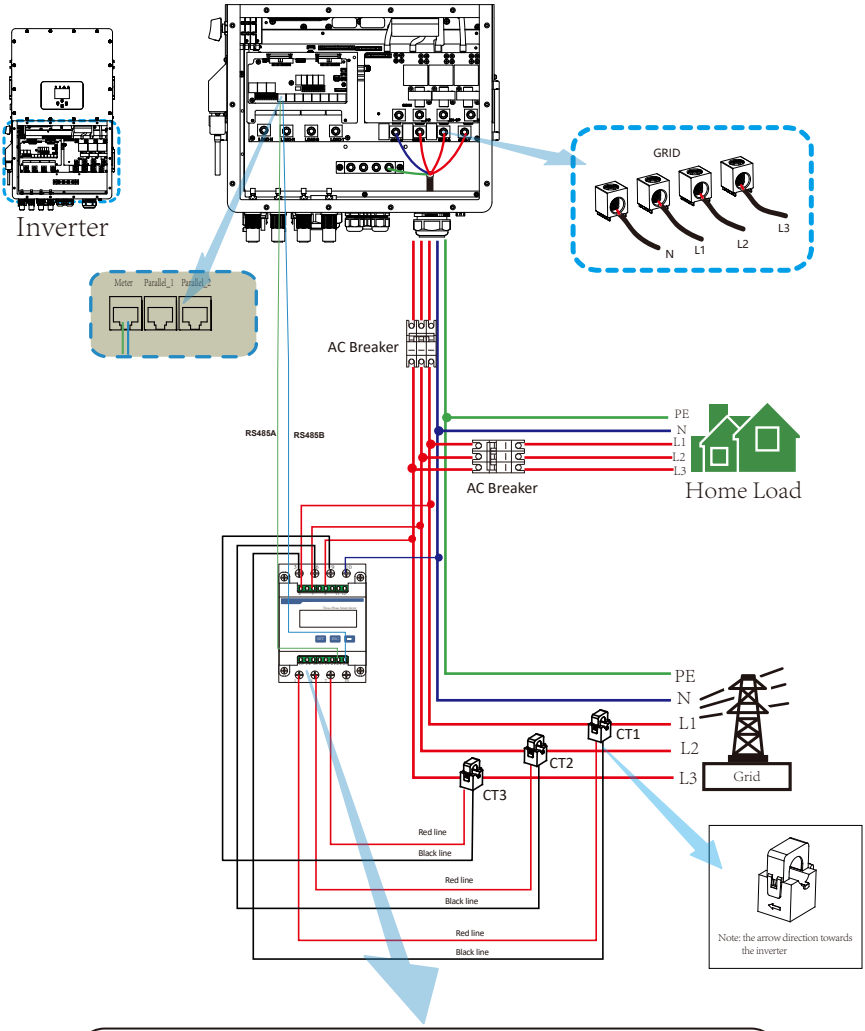

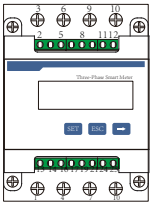

3x230/400V
0.05-1.5(6)A

CHNT DTSU666

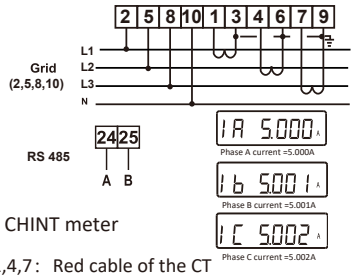

CHINT meter

PIN 1,4,7 : Red cable of the CT
PIN 3,6,9: Black cable of the CT

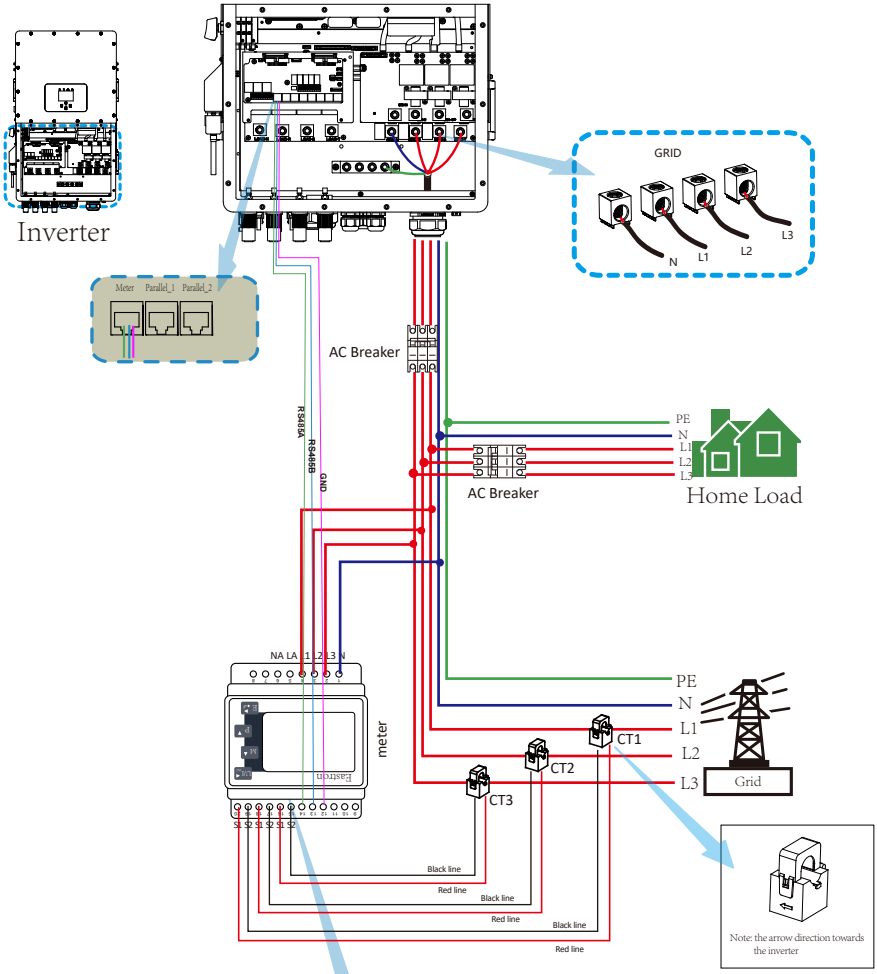
Inverter
GRID
N
L1
L2
L3
Meter
Parallel_1
Parallel_2
AC Breaker
RS485A
RS485B
GND
PE
N
L1
L2
L3
AC Breaker
Home Load
NA LA L1 L2 L3 N
meter
Eastron
CT1
CT2
CT3
Grid
Black line
Red line
Black line
Red line
Black line
Red line
Note: the arrow direction towards the inverter

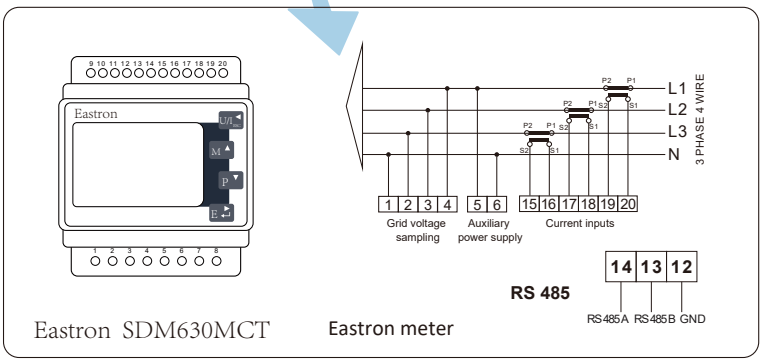
Eastron
Eastron SDM630MCT
L1
L2
L3
N
3 PHASE 4 WIRE
1 2 3 4
Grid voltage sampling
5 6
Auxiliary power supply
15 16 17 18 19 20
Current inputs
RS 485
14 13 12
RS485A RS485B GND
Eastron meter

Note:
When the inverter is in the off-grid state, the N line needs to be connected to the earth.

Note:
In final installation,breaker certified according to IEC 60947-1 and IEC 60947-2 shall be installed with the equipment.

3.7 Earth Connection(mandatory)

Ground cable shall be connected to ground plate on grid side this prevents electric shock if the original protective conductor fails.

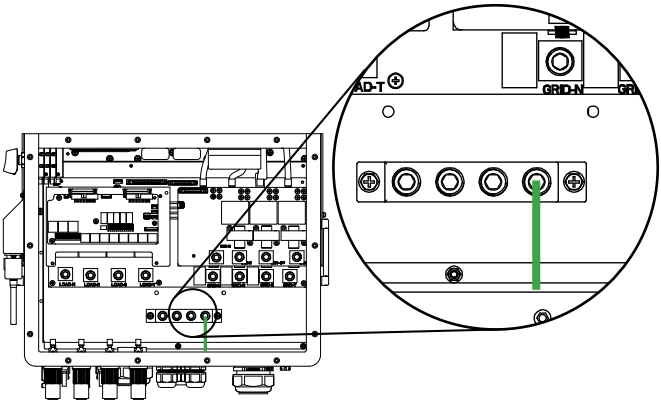

Earth connection(Copper wires)

Model	*Wire Size*	*Cable(mm²)*	*Torque value(max)*
29.9/30/35/40/50KW	0AWG	53.5	20.3Nm

The conductor should be made of the same metal as the phase conductors.

3.8 WIFI Connection

For the configuration of Wi-Fi Plug, please refer to illustrations of the Wi-Fi Plug. The Wi-FI Plug is not a standard configuration, it's optional.

3.9 Wiring System for Inverter

This diagram is an example for an application that neutral connects with the PE in a distribution box.

For countries such as Australia, New Zealand, South Africa, etc., please follow local wiring regulations!

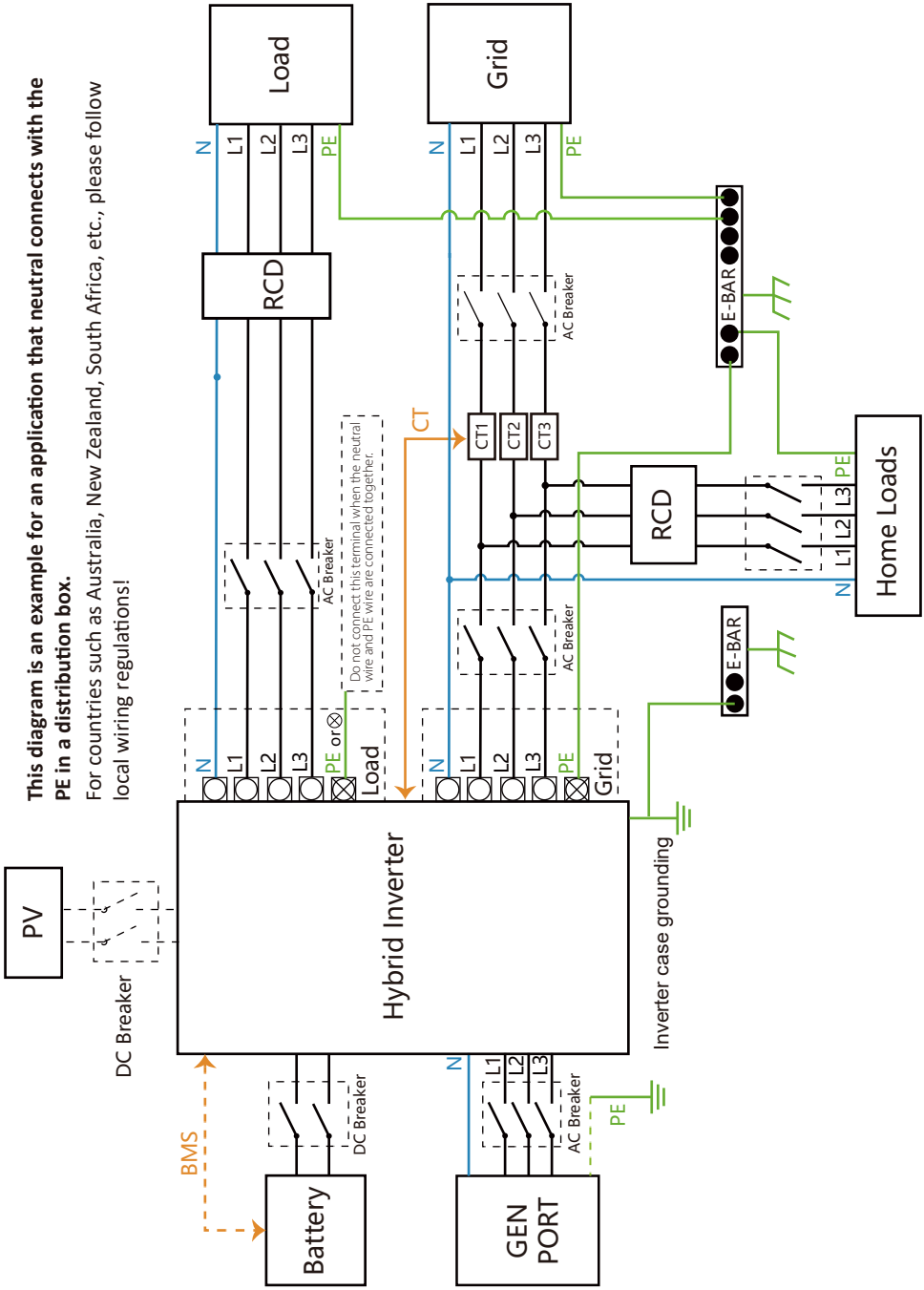

3.10 Wiring diagram

This diagram is an example for an application in which neutral is separated from the PE in the distribution box.

For countries such as China, Germany,the Czech Republic, Italy, etc., please follow local wiring reguations!

Note:Backup function is optional in German market.please leave backup side empty if backup function is not available in the inverter.

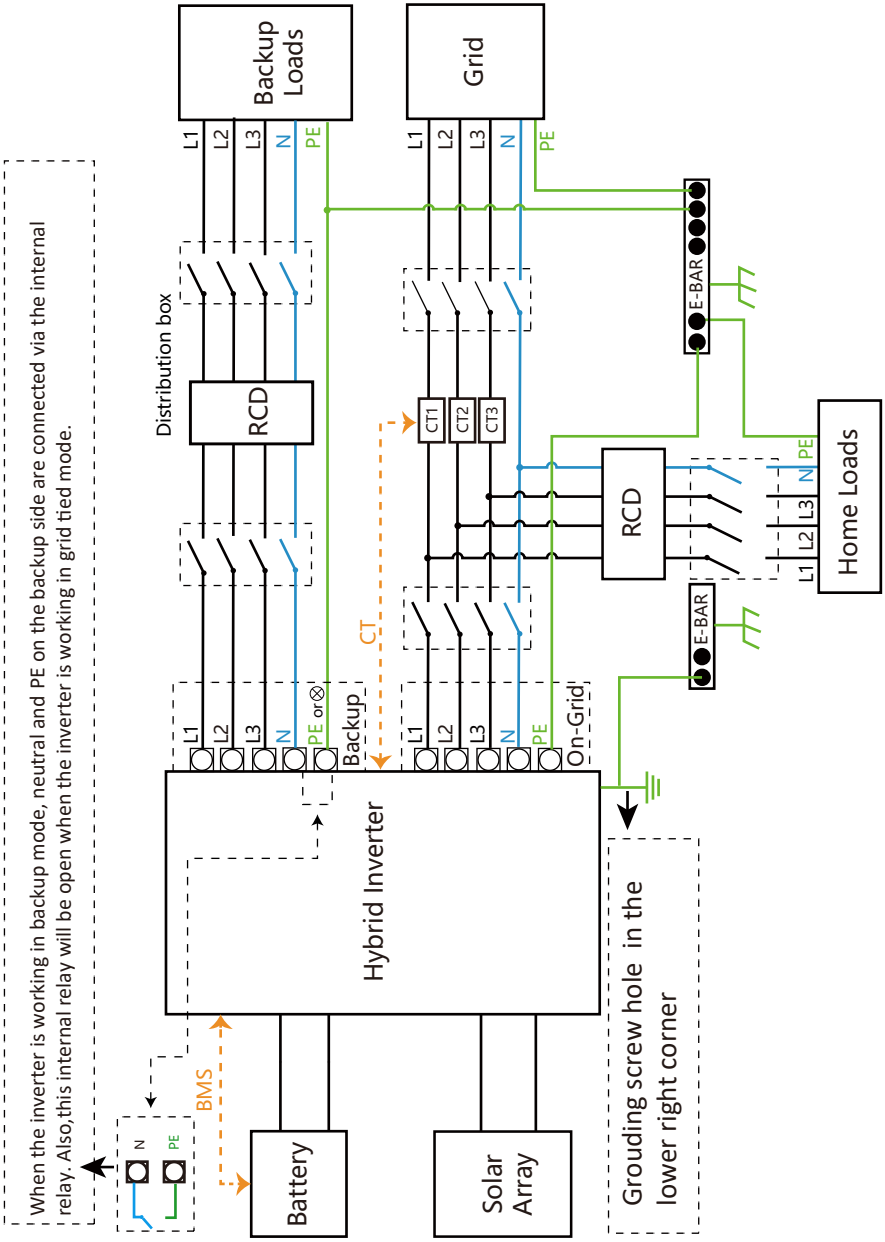

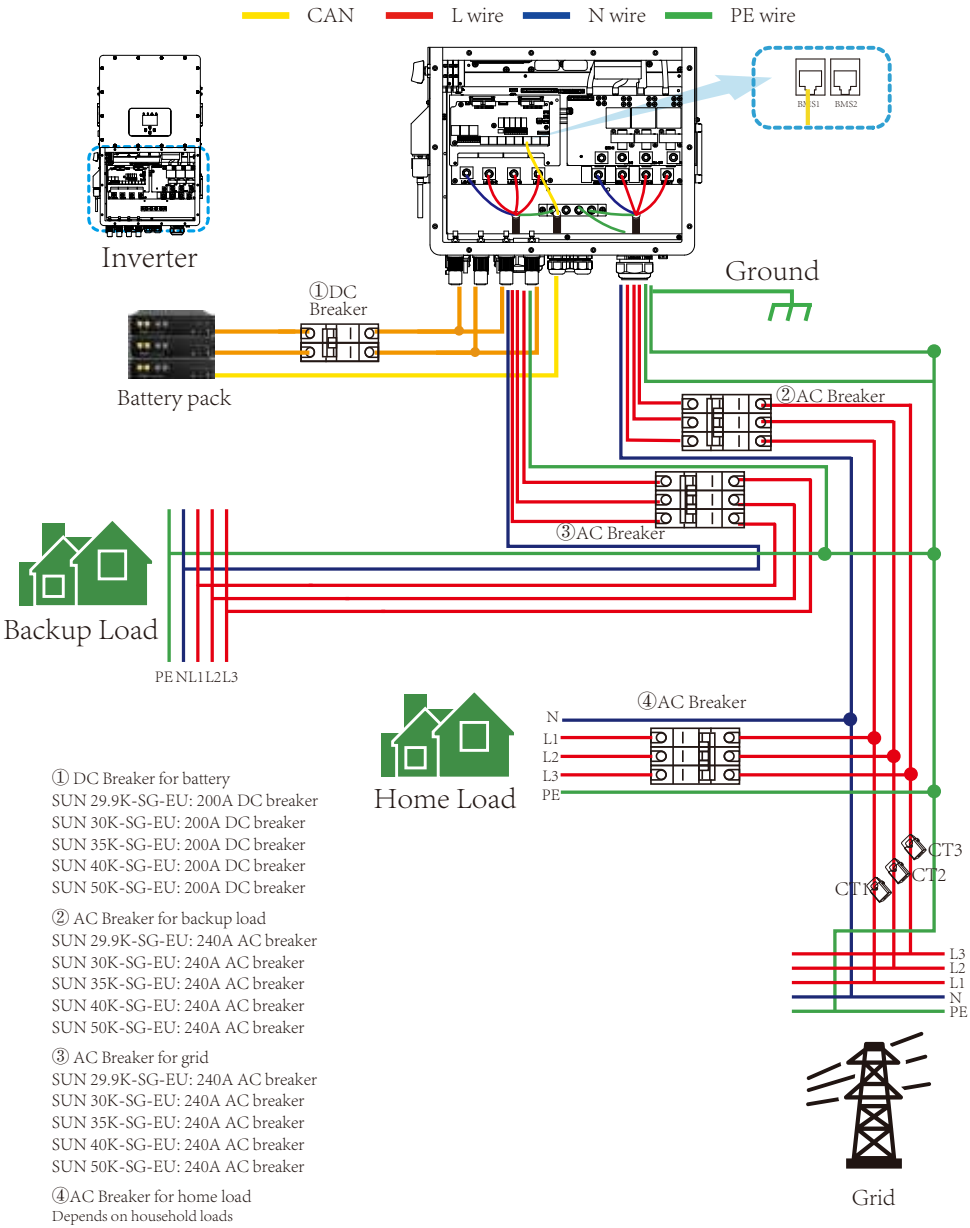

① DC Breaker for battery
SUN 29.9K-SG-EU: 200A DC breaker
SUN 30K-SG-EU: 200A DC breaker
SUN 35K-SG-EU: 200A DC breaker
SUN 40K-SG-EU: 200A DC breaker
SUN 50K-SG-EU: 200A DC breaker

② AC Breaker for backup load
SUN 29.9K-SG-EU: 240A AC breaker
SUN 30K-SG-EU: 240A AC breaker
SUN 35K-SG-EU: 240A AC breaker
SUN 40K-SG-EU: 240A AC breaker
SUN 50K-SG-EU: 240A AC breaker

③ AC Breaker for grid
SUN 29.9K-SG-EU: 240A AC breaker
SUN 30K-SG-EU: 240A AC breaker
SUN 35K-SG-EU: 240A AC breaker
SUN 40K-SG-EU: 240A AC breaker
SUN 50K-SG-EU: 240A AC breaker

④AC Breaker for home load
Depends on household loads

3.11 Typical application diagram of diesel generator

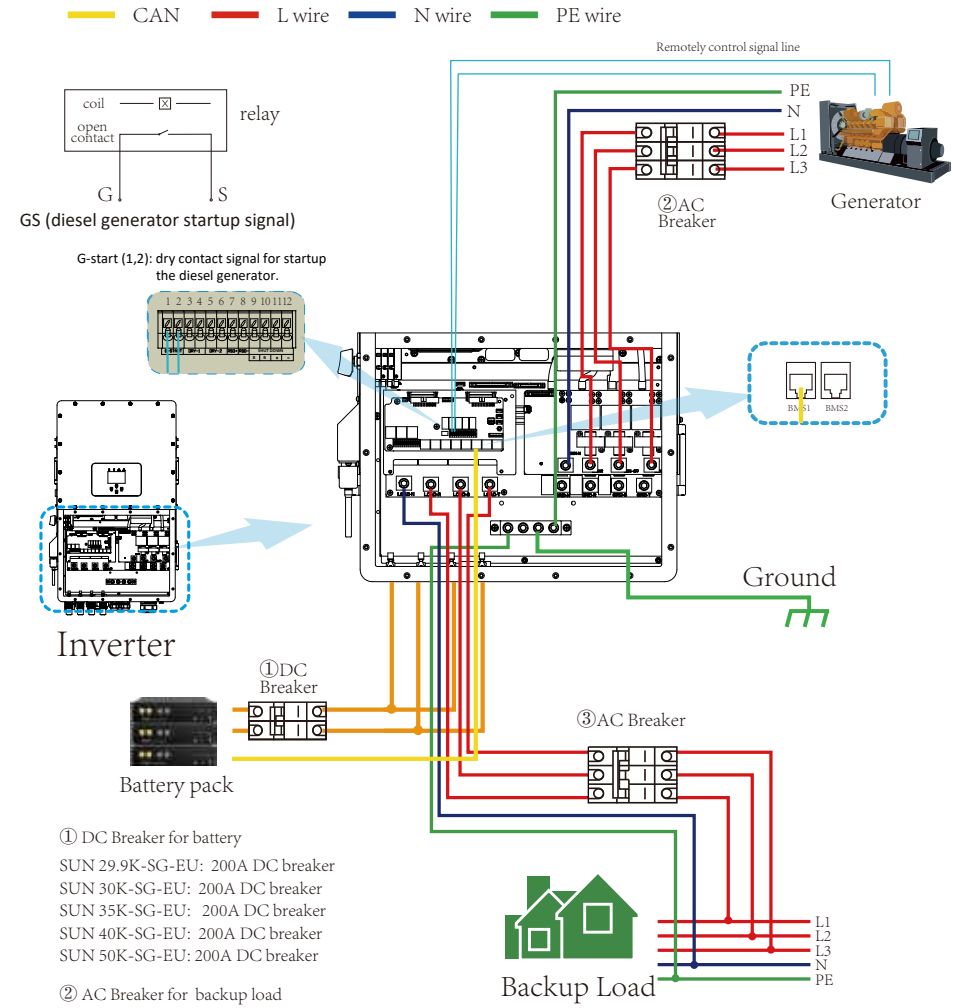

① DC Breaker for battery

SUN 29.9K-SG-EU: 200A DC breaker
SUN 30K-SG-EU: 200A DC breaker
SUN 35K-SG-EU: 200A DC breaker
SUN 40K-SG-EU: 200A DC breaker
SUN 50K-SG-EU: 200A DC breaker

② AC Breaker for backup load

SUN 29.9K-SG-EU: 240A AC breaker
SUN 30K-SG-EU: 240A AC breaker
SUN 35K-SG-EU: 240A AC breaker
SUN 40K-SG-EU: 240A AC breaker
SUN 50K-SG-EU: 240A AC breaker

③ AC Breaker for Generator port

SUN 29.9K-SG-EU: 240A AC breaker
SUN 30K-SG-EU: 240A AC breaker
SUN 35K-SG-EU: 240A AC breaker
SUN 40K-SG-EU: 240A AC breaker
SUN 50K-SG-EU: 240A AC breaker

3.12 Three phase parallel connection diagram

Note: The function of Multiple units work in parallel mode will be avaiable in Q1 2023.

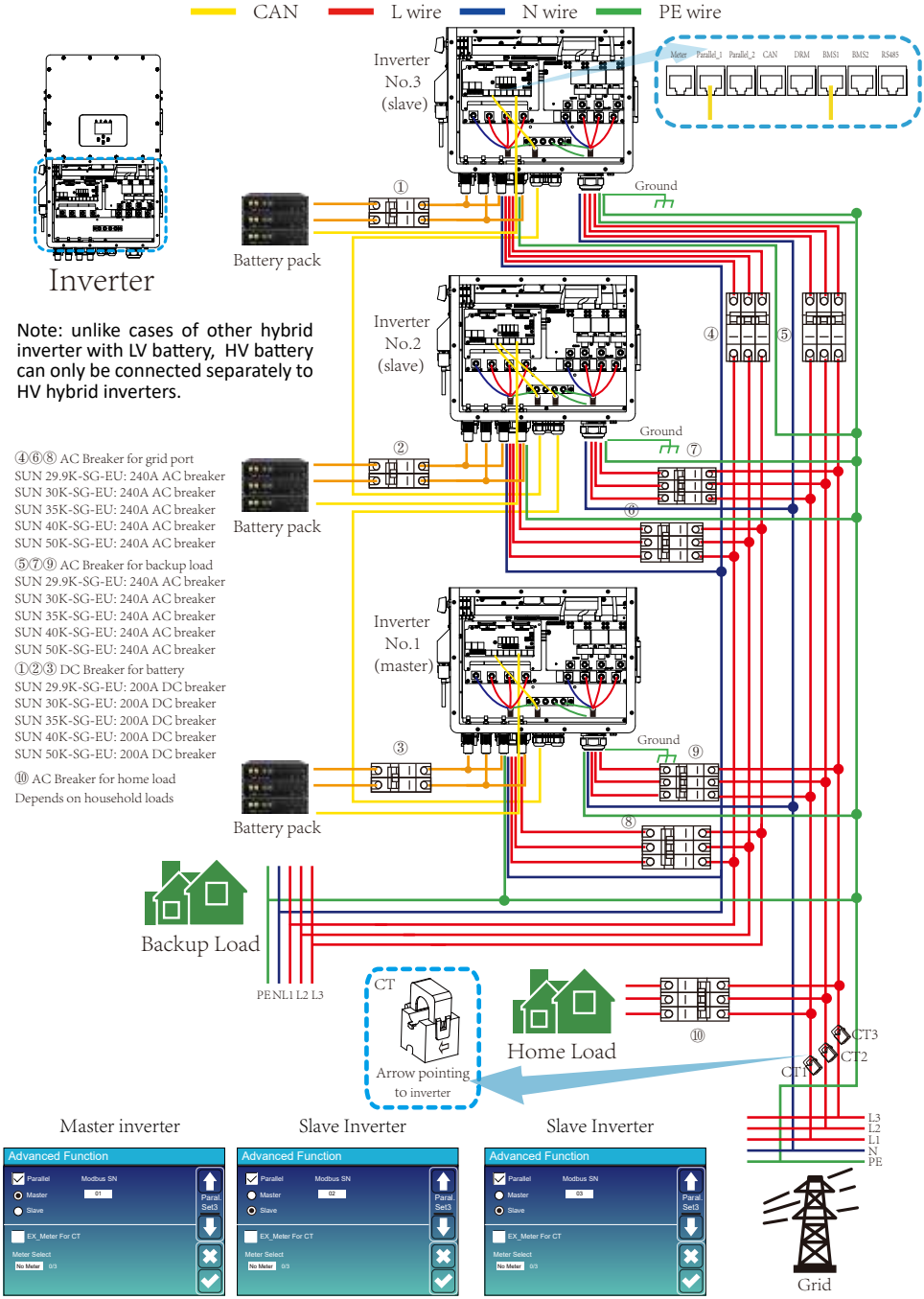

4. OPERATION

4.1 Power ON/OFF

Once the unit has been properly installed and the batteries are connected well, simply press On/Off button(located on the left side of the case) to turn on the unit. When system without battery connected, but connect with either PV or grid, and ON/OFF button is switched off, LCD will still light up(Display will show OFF), In this condition, when switch on ON/OFF button and select NO battery,system can still working.

4.2 Operation and Display Panel

The operation and display panel, shown in below chart, is on the front panel of the inverter. It includes four indicators, four function keys and a LCD display, indicating the operating status and input/output power information.

LED Indicator		***Messages***
DC	Green led solid light	PV Connection normal
AC	Green led solid light	Grid Connection normal
Normal	Green led solid light	Inverter operating normal
Alarm	Red led solid light	Malfunction or warning

Chart 4-1 LED indicators

Function Key	***Description***
Esc	To exit setting mode
Up	To go to previous selection
Down	To go to next selection
Enter	To confirm the selection

Chart 4-2 Function Buttons

5. LCD Display Icons

5.1 Main Screen

The LCD is touchscreen, below screen shows the overall information of the inverter.

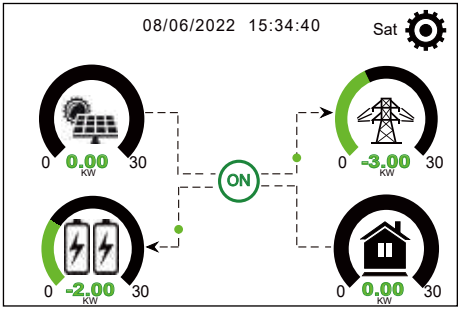

1.The icon in the center of the home screen indicates that the system is Normal operation. If it turns into "comm./F01~F64" , it means the inverter has communication errors or other errors, the error message will display under this icon(F01-F64 errors, detail error info can be viewed in the System Alarms menu).

2.At the top of the screen is the time.

3.System Setup Icon, Press this set button,you can enter into the system setup screen which including Basic Setup, Battery Setup, Grid Setup, System Work Mode, Generator port use, Advanced function and Li-Batt info.

4.The main screen showing the info including Solar, Grid, Load and Battery. Its also displaying the energy flow direction by arrow. When the power is approximate to high level, the color on the panels will changing from green to red so system info showing vividly on the main screen.

· PV power and Load power always keep positive.
· Grid power negative means sell to grid, positive means get from grid.
· Battery power negative means charge, positive means discharge.

5.1.1 LCD operation flow chart

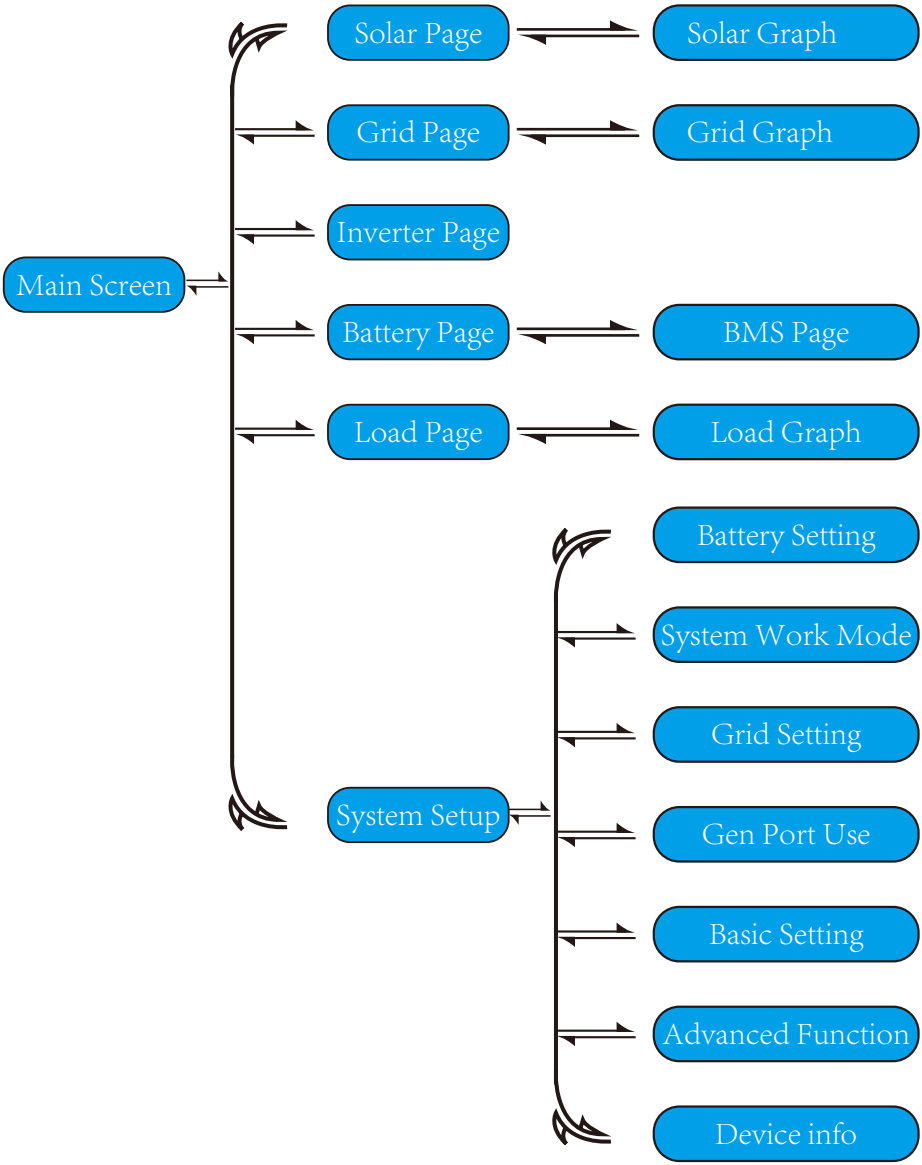

5.2 Solar Power Curve

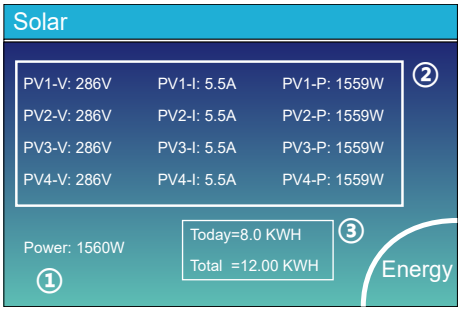

This is Solar Panel detail page.

① Solar Panel Generation.
② Voltage, Current, Power for each MPPT.
③ Daily and total PV production.

Press the "Energy "button will enter into the power curve page.

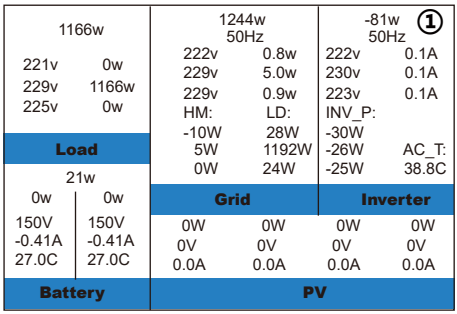

This is Inverter detail page.

① Inverter Generation.
Voltage, Current, Power for each Phase.
AC-T: mean Heat-sink temperature.

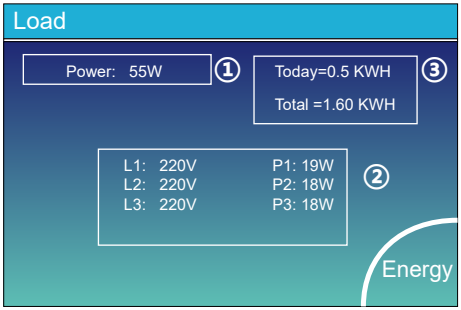

This is Back-up Load detail page.

① Back-up Power.
② Voltage, Power for each Phase.
③ Daily and total backup consumption .

Press the "Energy " button will enter into the power curve page.

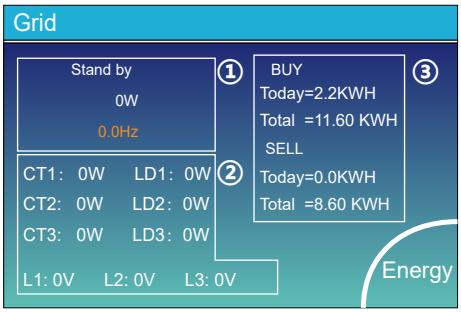

This is Grid detail page.

① Status, Power, Frequency.
② L: Voltage for each Phase
CT: Power detected by the external current sensors
LD: Power detected using internal sensors on AC grid in/out breaker
③ BUY: Energy from Grid to Inverter,
SELL: Energy from Inverter to grid.

Press the "Energy " button will enter into the power curve page.

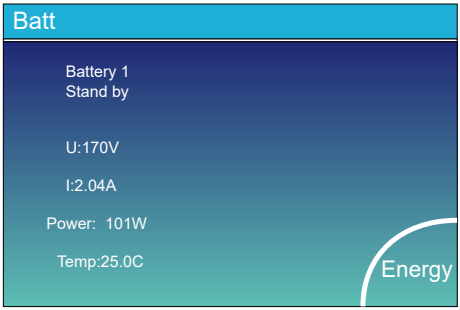

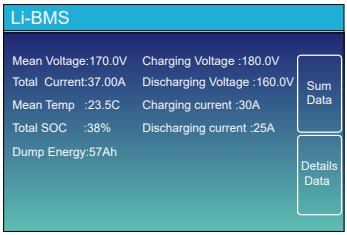

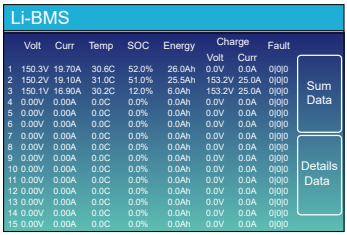

	Volt	Curr	Temp	SOC	Energy	Charge Volt	Charge Curr	Fault
1	150.3V	19.70A	30.6C	52.0%	26.0Ah	0.0V	0.0A	0|0|0
2	150.2V	19.10A	31.0C	51.0%	25.5Ah	153.2V	25.0A	0|0|0
3	150.1V	16.90A	30.2C	12.0%	6.0Ah	153.2V	25.0A	0|0|0
4	0.00V	0.00A	0.0C	0.0%	0.0Ah	0.0V	0.0A	0|0|0
5	0.00V	0.00A	0.0C	0.0%	0.0Ah	0.0V	0.0A	0|0|0
6	0.00V	0.00A	0.0C	0.0%	0.0Ah	0.0V	0.0A	0|0|0
7	0.00V	0.00A	0.0C	0.0%	0.0Ah	0.0V	0.0A	0|0|0
8	0.00V	0.00A	0.0C	0.0%	0.0Ah	0.0V	0.0A	0|0|0
9	0.00V	0.00A	0.0C	0.0%	0.0Ah	0.0V	0.0A	0|0|0
10	0.00V	0.00A	0.0C	0.0%	0.0Ah	0.0V	0.0A	0|0|0
11	0.00V	0.00A	0.0C	0.0%	0.0Ah	0.0V	0.0A	0|0|0
12	0.00V	0.00A	0.0C	0.0%	0.0Ah	0.0V	0.0A	0|0|0
13	0.00V	0.00A	0.0C	0.0%	0.0Ah	0.0V	0.0A	0|0|0
14	0.00V	0.00A	0.0C	0.0%	0.0Ah	0.0V	0.0A	0|0|0
15	0.00V	0.00A	0.0C	0.0%	0.0Ah	0.0V	0.0A	0|0|0

5.3 Curve Page-Solar & Load & Grid

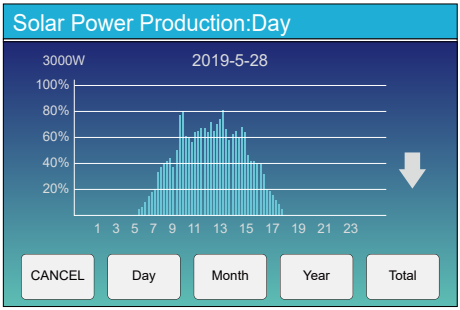

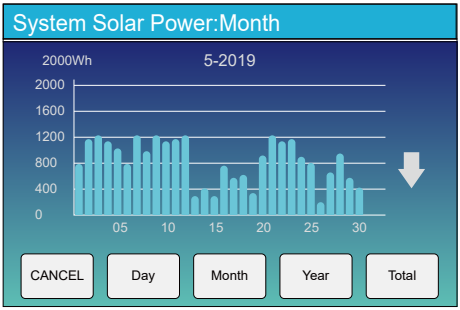

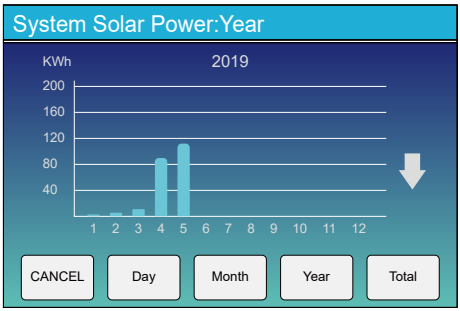

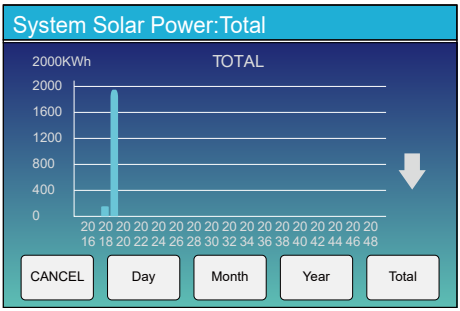

Solar power curve for daily, monthly, yearly and total can be roughly checked on the LCD, for more accuracy power generation, pls check on the monitoring system. Click the up and down arrow to check power curve of different period.

5.4 System Setup Menu

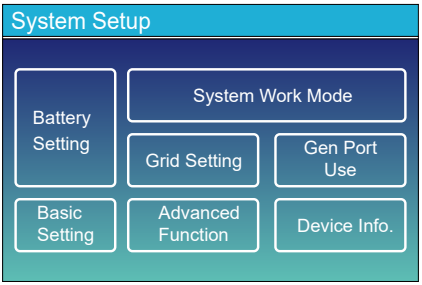

This is System Setup page.

5.5 Basic Setup Menu

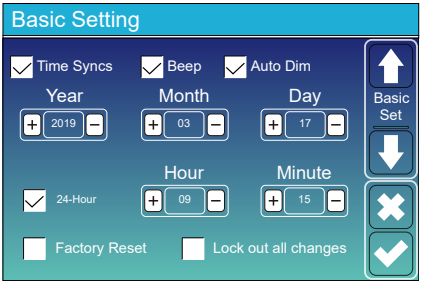

Factory Reset: Reset all parameters of the inverter.
Lock out all changes: Enable this menu for setting parameters that require locking and cannot be set up. Before performing a successful factory reset and locking the systems, to keep all changes you need to type in a password to enable the setting.
The password for factory settings is 9999 and for lock out is 7777.

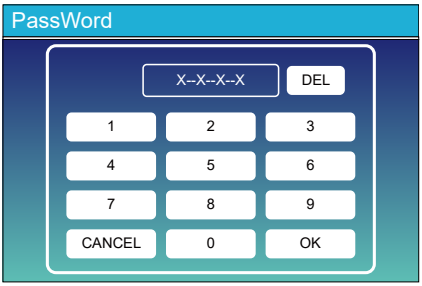

Factory Reset PassWork: 9999

Lock out all changes PassWork: 7777

5.6 Battery Setup Menu

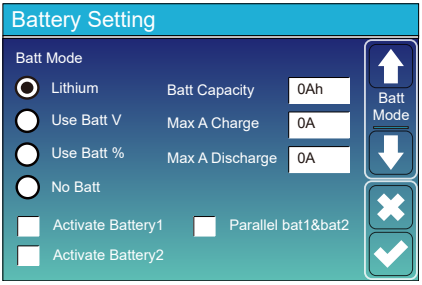

Battery capacity: it shows your battery bank size to Deye hybrid inverter.

Use Batt V: Use Battery Voltage for all the settings (V).

Use Batt %: Use Battery SOC for all the settings (%).

Max. A charge/discharge: Max battery charge/discharge current(0-50A for 29.9/30/35/40/50KW model).
For AGM and Flooded, we recommend Ah battery size x 20%= Charge/Discharge amps.
. For Lithium, we recommend Ah battery size x 50% = Charge/Discharge amps.
. For Gel, follow manufacturer' s instructions.

No Batt: tick this item if no battery is connected to the system.

Activate Battery1/Activate Battery2: This feature will help recover a battery that is over discharged by slowly charging from the solar array or grid.

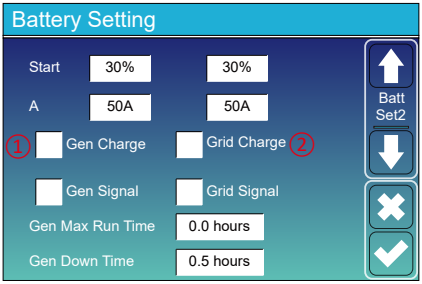

This is Battery Setup page. ①

Start =30%: Percent SOC below 30% system will AutoStart a connected generator to charge the battery bank.

A = 50A: Charge rate of 50A from the attached generator in Amps.

Gen Charge: uses the gen input of the system to charge battery bank from an attached generator.

Gen Signal: Normally open relay that closes when the Gen Start signal state is active.

This is Grid Charge, you need select. ②

Start =30%: No use , Just for customization.

A = 50A: It indicates the Current that the Grid charges the Battery.

Grid Charge: It indicates that the grid charges the battery.

Grid Signal: Disable.

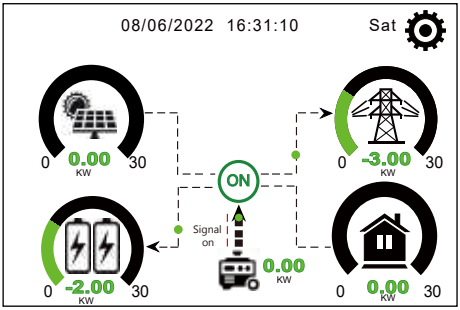

This page tells the PV and diesel generator power the load and battery.

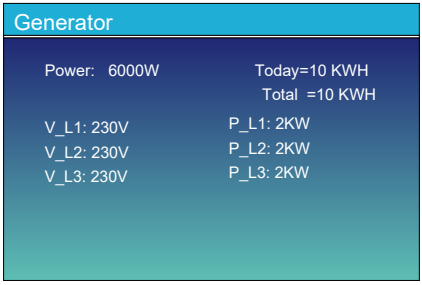

This page tells generator output voltage, frequency, power. And, how much energy is used from generator.

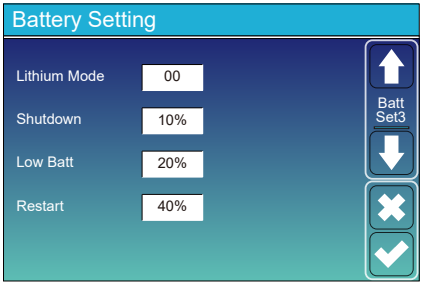

Lithium Mode: This is BMS protocol.Please reference the document(Approved Battery).

Shutdown 10%: It indicates the inverter will shutdown if the SOC below this value.

Low Batt 20%: It indicates the inverter will alarm if the SOC below this value.

Restart 40%: Battery SOC at 40% AC output will resume.

Recommended battery settings

Battery Type	*Absorption Stage*	*Float Stage*	*Torque value (every 30 days 3hr)*
Lithium	Follow its BMS voltage parameters		

5.7 System Work Mode Setup Menu

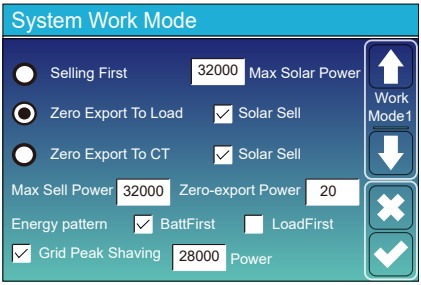

Work Mode

Selling First: This Mode allows hybrid inverter to sell back any excess power produced by the solar panels to the grid. If time of use is active, the battery energy also can be sold into grid.

The PV energy will be used to power the load and charge the battery and then excess energy will flow to grid.

Power source priority for the load is as follows:

1. Solar Panels.
2. Grid.
3. Batteries (until programable % discharge is reached).

Zero Export To Load: Hybrid inverter will only provide power to the backup load connected. The hybrid inverter will neither provide power to the home load nor sell power to grid. The built-in CT will detect power flowing back to the grid and will reduce the power of the inverter only to supply the local load and charge the battery.

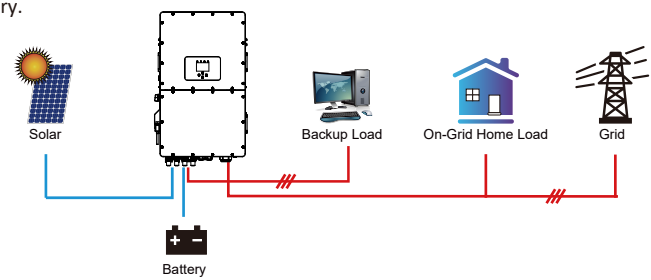

Zero Export To CT: Hybrid inverter will not only provide power to the backup load connected but also give power to the home load connected. If PV power and battery power is insufficient, it will take grid energy as supplement. The hybrid inverter will not sell power to grid. In this mode, a CT is needed. The installation method of the CT please refer to chapter 3.6 CT Connection. The external CT will detect power flowing back to the grid and will reduce the power of the inverter only to supply the local load, charge battery and home load.

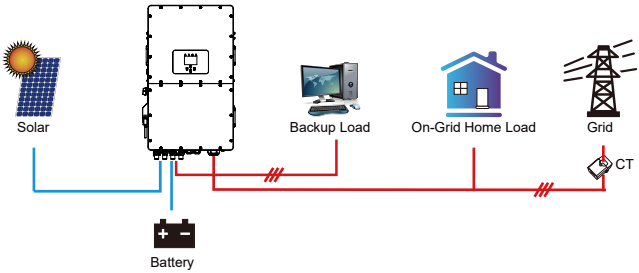

Solar Sell: “Solar sell” is for Zero export to load or Zero export to CT: when this item is active, the surplus energy can be sold back to grid. When it is active, PV Power source priority usage is as follows: load consumption and charge battery and feed into grid.

Max. sell power: Allowed the maximum output power to flow to grid.

Zero-export Power: for zero-export mode, it tells the grid output power. Recommend to set it as 20-100W to ensure the hybrid inverter won' t feed power to grid.

Energy Pattern: PV Power source priority.

Batt First: PV power is firstly used to charge the battery and then used to power the load. If PV power is insufficient, grid will make supplement for battery and load simultaneously.

Load First: PV power is firstly used to power the load and then used to charge the battery. If PV power is insufficient, Grid will provide power to load.
Max Solar Power: allowed the maximum DC input power.

Grid Peak-shaving: when it is active, grid output power will be limited within the set value. If the load power exceeds the allowed value, it will take PV energy and battery as supplement. If still can’t meet the load requirement, grid power will increase to meet the load needs.

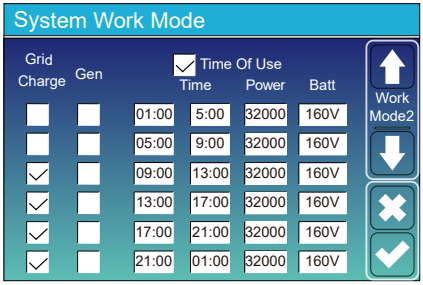

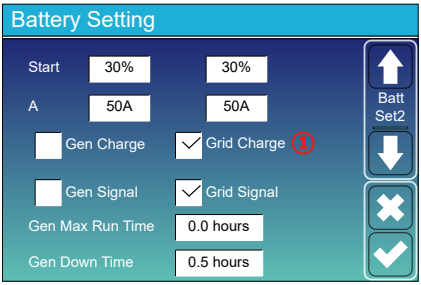

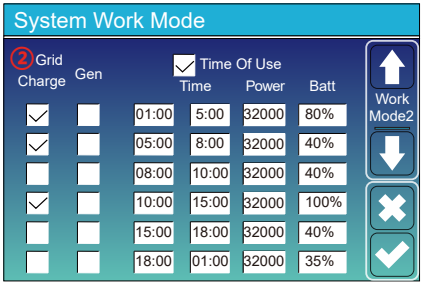

Time of use: it is used to program when to use grid or generator to charge the battery, and when to discharge the battery to power the load. Only tick "Time Of Use" then the follow items (Grid, charge, time, power etc.) will take effect.
Note: when in selling first mode and click time of use, the battery power can be sold into grid.
Gen charge: utilize diesel generator to charge the battery in a time period.
Time: real time, range of 01:00-24:00.
Note: when the grid is present, only the “time of use” is ticked, then the battery will discharge. Otherwise, the battery won’t discharge even the battery SOC is full. But in the off-grid mode (when grid is not available, inverter will work in the off-grid mode automatically).
Power: Max. discharge power of battery allowed.
Batt(V or SOC %): battery SOC % or voltage at when the action is to happen.

For example
During 01:00-05:00,
if battery SOC is lower than 80%, it will use grid to charge the battery until battery SOC reaches 80%.
During 05:00-08:00,
if battery SOC is higher than 40%, hybrid inverter will discharge the battery until the SOC reaches 40%. At the same time,
if battery SOC is lower than 40%, then grid will charge the battery SOC to 40%.
During 08:00-10:00,
if battery SOC is higher than 40%, hybrid inverter will discharge the battery until the SOC reaches 40%.
During 10:00-15:00,
when battery SOC is higher than 80%, hybrid inverter will discharge the battery until the SOC reaches 80%.
During 15:00-18:00,
when battery SOC is higher than 40%, hybrid inverter will discharge the battery until the SOC reaches 40%.
During 18:00-01:00,
when battery SOC is higher than 35%, hybrid inverter will discharge the battery until the SOC reaches 35%.

5.8 Grid Setup Menu

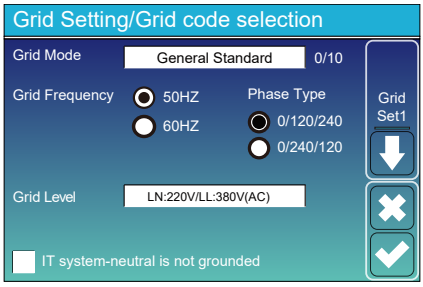

Grid Mode: General Standard、UL1741 & IEEE1547、CPUC RULE21、SRD-UL-1741、CEI 0-21、Australia A、Australia B、Australia C、EN50549_CZ-PPDS(>16A)、NewZealand、VDE4105、OVE-Directive R25.
Please follow the local grid code and then choose the corresponding grid standard.
Grid level: there're several voltage levels for the inverter output voltage when it is in off-grid mode.
LN:230VAC LL:400VAC,LN:240VAC LL:420VAC, LN:120VAC LL:208VAC, LN:133VAC LL:230VAC.
IT system: For the IT grid system, the Line voltage (between any two lines in a three-phase circuit) is 230Vac, and the diagram is as follow.If your grid system is IT system, please enable "IT system" and tick the "Grid level" as 133-3P as below picture shows.

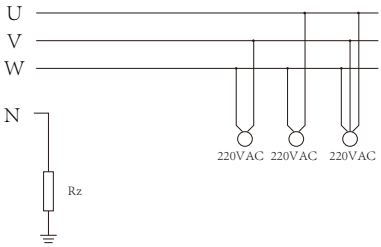

Rz: Large resistance ground resistor. Or the system doesn't have Neutral line

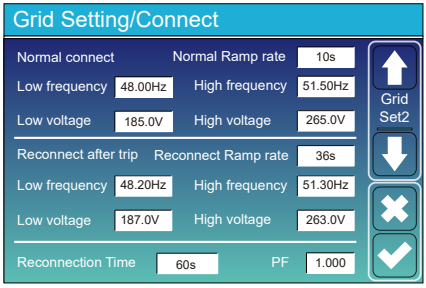

Normal connect: The allowed grid voltage/frequency range when the inverter first time connect to the grid.
Normal Ramp rate: It is the startup power ramp.

Reconnect after trip: The allowed grid voltage /frequency range for the inverter connects the grid after the inverter trip from the grid.
Reconnect Ramp rate:It is the reconnection power ramp.

Reconnection time: The waiting time period for the inverter connects the grid again.
PF: Power factor which is used to adjust inverter reactive power.

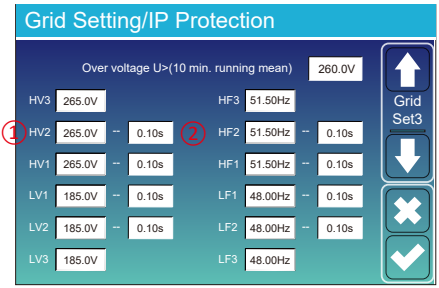

HV1: Level 1 overvoltage protection point;
① **HV2:** Level 2 overvoltage protection point; ② 0.10s—Trip time.
HV3: Level 3 overvoltage protection point.

LV1: Level 1 undervoltage protection point;
LV2: Level 2 undervoltage protection point;
LV3: Level 3 undervoltage protection point.

HF1: Level 1 over frequency protection point;
HF2: Level 2 over frequency protection point;
HF3: Level 3 over frequency protection point.

LF1: Level 1 under frequency protection point;
LF2: Level 2 under frequency protection point;
LF3: Level 3 under frequency protection point.

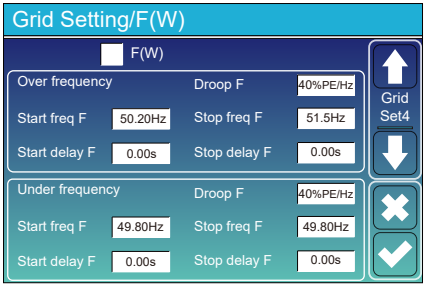

FW: this series inverter is able to adjust inverter output power according to grid frequency.
Droop F: percentage of nominal power per Hz
For example, "Start freq F＞50.2Hz, Stop freq F＜51.5, Droop F=40%PE/Hz" when the grid frequency reaches 50.2Hz, the inverter will decrease its active power at Droop F of 40%. And then when grid system frequency is less than 50.1Hz, the inverter will stop decreasing output power.
For the detailed setup values, please follow the local grid code.

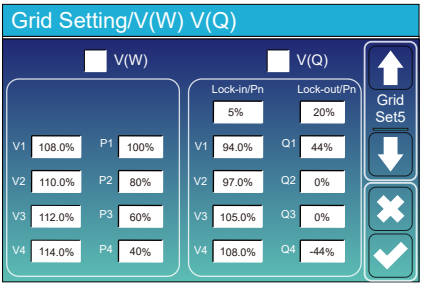

V(W): It is used to adjust the inverter active power according to the set grid voltage.
V(Q): It is used to adjust the inverter reactive power according to the set grid voltage.
This function is used to adjust inverter output power (active power and reactive power) when grid voltage changes.

Lock-in/Pn 5%: When the inverter active power is less than 5% rated power, the VQ mode will not take effect.
Lock-out/Pn 20%: If the inverter active power is increasing from 5% to 20% rated power, the VQ mode will take effect again.

For example: V2=110%, P2=80%. When the grid voltage reaches the 110% times of rated grid voltage, inverter output power will reduce its active output power to 80% rated power.
For example: V1=94%, Q1=44%. When the grid voltage reaches the 94% times of rated grid voltage, inverter output power will output 44% reactive output power.
For the detailed setup values, please follow the local grid code.

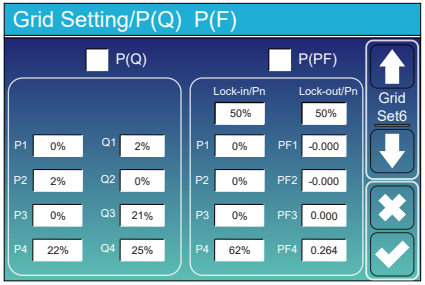

P(Q): It is used to adjust the inverter reactive power according to the set active power.
P(PF): It is used to adjust the inverter PF according to the set active power.
For the detailed setup values, please follow the local grid code.
Lock-in/Pn 50%: When the inverter output active power is less then 50% rated power, it won't enter the P(PF) mode.
Lock-out/Pn 50%: Lock-out/Pn 50%: When the inverter output active power is higher then 50% rated power, it will enter the P(PF) mode.
Note : only when the grid voltage is equal to or higher than 1.05times of rated grid voltage, then the P(PF) mode will take effect.

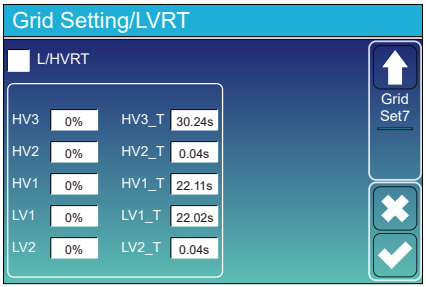

Reserved: This function is reserved.It is not recommended.

5.9 Generator Port Use Setup Menu

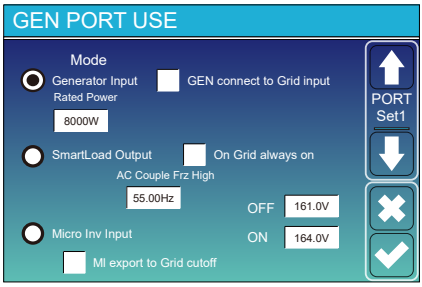

Generator input rated power: allowed Max. power from diesel generator.
GEN connect to grid input: connect the diesel generator to the grid input port.
Smart Load Output: This mode utilizes the Gen input connection as an output which only receives power when the battery SOC is above a user programmable threshold.
e.g. ON: 100%, OFF: 95%: When the battery bank SOC reaches 100%, Smart Load Port will switch on automatically and power the load connected. When the battery bank SOC < 95% , the Smart Load Port will switch off automatically.

Smart Load OFF Batt
• Battery SOC at which the Smart load will switch off.
Smart Load ON Batt
• Battery SOC at which the Smart load will switch on. simultaneously and then the Smart load will switch on.
On Grid always on: When click "on Grid always on" the smart load will switch on when the grid is present.
Micro Inv Input: To use the Generator input port as a micro-inverter on grid inverter input (AC coupled), this feature will also work with "Grid-Tied" inverters.

* **Micro Inv Input OFF**: when the battery SOC exceeds setting value, Microinveter or grid-tied inverter will shut down.
* **Micro Inv Input ON**: when the battery SOC is lower than setting value, Microinveter or grid-tied inverter will start to work.
AC Couple Frz High: If choosing"Micro Inv input", as the battery SOC reaches gradually setting value (OFF), during the process, the microinverter output power will decrease linear. When the battery SOC equals to the setting value (OFF), the system frequency will become the setting value (AC couple Frz high) and the Microinverter will stop working.
MI export to grid cutsoff: Stop exporting power produced by the microinverter to the grid.

* **Note**: Micro Inv Input OFF and On is valid for some certain FW version only.

5.10 Advanced Function Setup Menu

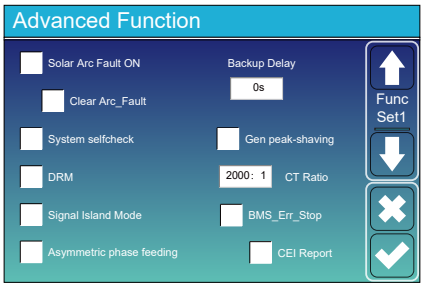

Solar Arc Fault ON: This is only for US.
System selfcheck: Disable. this is only for factory.
Gen Peak-shaving: Enable When the power of the generator exceeds the rated value of it, the inverter will provide the redundant part to ensure that the generator will not overload.
DRM: For AS4777 standard
Backup Delay: Reserved
BMS_Err_Stop: When it is active, if the battery BMS failed to communicate with inverter, the inverter will stop working and report fault.

Signal island mode: If "Signal island mode" is checked and When inverter is in off-grid mode, the relay on the Neutral line (load port N line) will switch ON then the N line (load port N line) will bind to inverter ground.

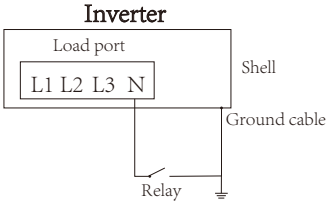

Asymmetric phase feeding: If it was checked, the excess PV energy that feeds into the grid will be balanced on the three phase.

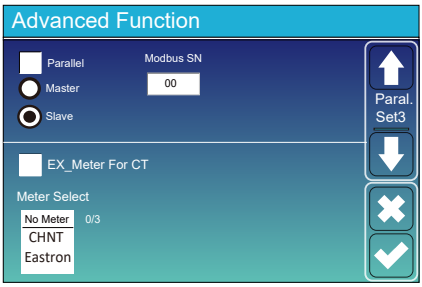

Ex_Meter For CT: when using zero-export to CT mode, the hybrid inverter can select EX_Meter For CT function and use the different meters.e.g.CHNT and Eastron.

5.11 Device Info Setup Menu

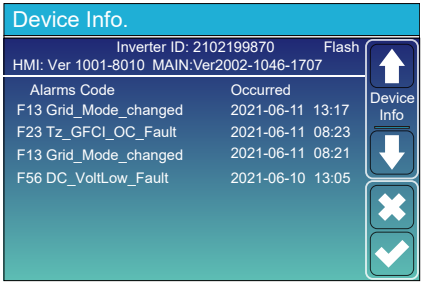

This page show Inverter ID, Inverter version and alarm codes.

HMI: LCD version

MAIN: Control board FW version

6. Mode

Mode I:Basic

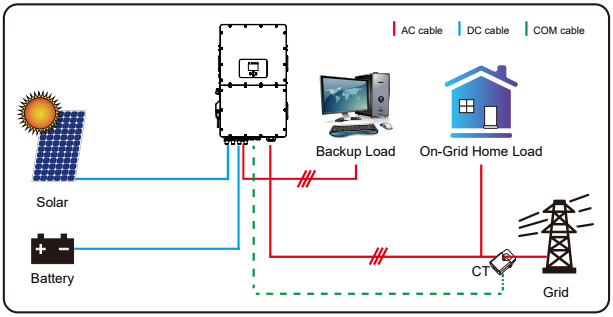

Mode II: With Generator

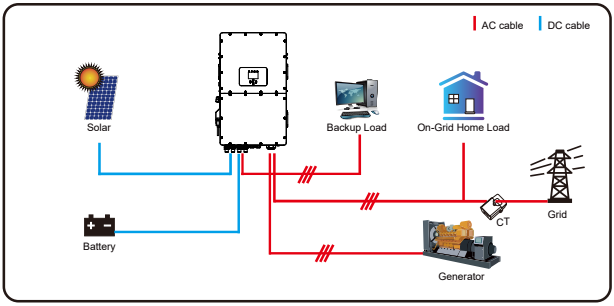

Mode III: With Smart-Load

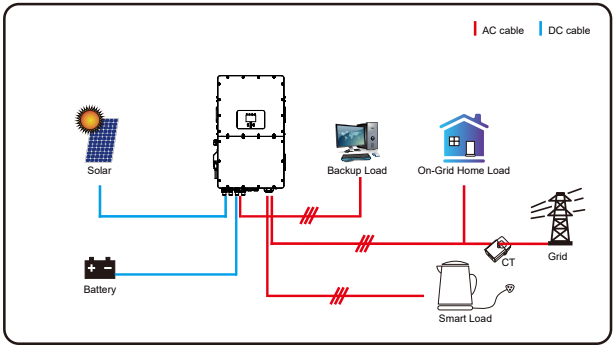

Mode IV: AC Couple

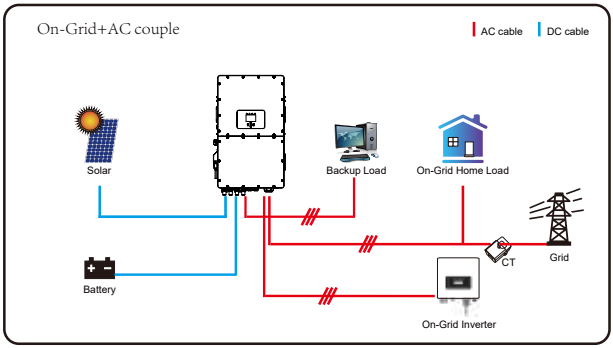

The 1st priority power of the system is always the PV power, then 2nd and 3rd priority power will be the battery bank or grid according to the settings. The last power backup will be the Generator if it is available.

7. Limitation of Liability

In addition to the product warranty described above, the state and local laws and regulations provide financial compensation for the product's power connection (including violation of implied terms and warranties). The company hereby declares that the terms and conditions of the product and the policy cannot and can only legally exclude all liability within a limited scope.

Error code	Description	Solutions
F01	DC_Inversed_Failure	1, Check the PV input polarity 2, Seek help from us, if can not go back to normal state.
F07	DC_START_Failure	1, The BUS voltage can't be built from PV or battery. 2, Restart the inverter, If the fault still exists, please contact us for help
F13	Working_Mode_change	1. When the grid type and frequency changed it will report F13; 2. When the battery mode was changed to "No battery" mode,it will report F13; 3. For some old FW version, it will report F13 when the system work mode changed; 4, Generally, it will disappear automatically when shows F13; 5. If it remains same, turn on DC and AC switch for one minute, then turn on the DC and AC switch.; 6. Seek help from us, if can not go back to normal state.
F15	AC_OverCurr_SW_Failure	AC side over current fault 1. Please check whether the backup load power and common load power are within the range; 2. Restart and check whether it is normal; 3. Seek help from us, if can not go back to normal state.
F16	GFCI_Failure	Leakage current fault 1, Check the PV side cable ground connection 2, Restart the system 2-3 times 3, if the fault still existing, please contact us for help.
F18	Tz_Ac_OverCurr_Fault	AC side over current fault 1. Please check whether the backup load power and commonload power are within the range; 2. Restart and check whether it is normal; 3. Seek help from us, if cannot go back to normal state.
F20	Tz_Dc_OverCurr_Fault	DC side over current fault 1. Check PV module connection and battery connection; 2. When in the off-grid mode, the inverter startup with big power load, it may report F20. Please reduce the load power connected; 3. If it remains same, turn on DC and AC switch for one minute, then turn on the DC and AC switch.; 4. Seek help from us, if can not go back to normal state.

Error code	Description	Solutions
F21	Tz_HV_Overcurr_fault	BUS over current. 1, Check the PV input current and battery current setting 2. Restart the system 2~3 times. 3. If the fault still exists, please contact us for help.
F22	Tz_EmergStop_Fault	Remotely shutdown 1, it tells the inverter is remotely controlled.
F23	Tz_GFCI_OC_Fault	Leakage current fault 1. Check PV side cable ground connection. 2. Restart the system 2~3 times. 3. If the fault still exists, please contact us for help.
F24	DC_Insulation_Fault	PV isolation resistance is too low 1. Check the connection of PV panels and inverter is firmly and correctly; 2. Check whether the PE cable of inverter is connected to ground; 3. Seek help from us, if can not go back to normal state.
F26	BusUnbalance_Fault	1. Please wait for a while and check whether it is normal; 2. When the load power of 3 phases is big different, it will report the F26. 3 .When there’ s DC leakage current, it will report F26 4. Restart the system 2~3 times. 5. Seek help from us, if can not go back to normal state.
F29	Parallel_Comm_Fault	1. When in parallel mode, check the parallel communication cable connection and hybrid inverter communication address setting; 2. During the parallel system startup period, inverters will report F29.But when all inverters are in ON status, it will disappear automatically; 3. If the fault still exists, please contact us for help.
F34	AC_Overload_Fault	1, Check the backup load connection, make sure it is in allowed power range 2, If the fault still exists, please contact us for help
F41	Parallel_system_Stop	1, Check the hybrid inverter work status. If there’s 1pcs hybrid inverter shutdown, all hybrid inverters will report F41 fault. 2, If the fault still exists, please contact us for help
F42	Parallel_Version_Fault	Grid voltage fault 1. Check whether the AC voltage is within grid standard protection limits.; 2. Check whether grid AC cables are firmly and correctly connected; 3. Seek help from us, if can not go back to normal state.

Error code	Description	Solutions
F47	AC_OverFreq_Fault	Grid frequency out of range 1. Check the frequency is in the range of specification or not; 2. Check whether AC cables are firmly and correctly connected; 3. Seek help from us, if can not go back to normal state.
F48	AC_UnderFreq_Fault	Grid frequency out of range 1. Check the frequency is in the range of specification or not; 2. Check whether AC cables are firmly and correctly connected; 3. Seek help from us, if can not go back to normal state.
F52	DC_VoltHigh_Fault	BUS voltage is too high 1. Check whether battery voltage is too high; 2. check the PV input voltage, make sure it is within the allowed range; 3. Seek help from us, if can not go back to normal state.
F53	DC_VoltLow_Fault	BUS voltage is too low 1. Check whether battery voltage is too low; 2. If the battery voltage is too low, using PV or grid to charge the battery; 3. Seek help from us, if can not go back to normal state.
F54	BAT2_VoltHigh_Fault	1. Check the battery 2 terminal voltage is high; 2. Restart the inverter 2 times and restore the factory settings; 3. Seek help from us, if can not go back to normal state.
F55	BAT1_VoltHigh_Fault	1. Check the battery 1 terminal voltage is high; 2. Restart the inverter 2 times and restore the factory settings; 3. Seek help from us, if can not go back to normal state.
F56	BAT1_VoltLow_Fault	1. Check the battery 1 terminal voltage is low; 2. Restart the inverter 2 times and restore the factory settings; 3. Seek help from us, if can not go back to normal state.
F57	BAT2_VoltLow_Fault	1. Check the battery 2 terminal voltage is low; 2. Restart the inverter 2 times and restore the factory settings; 3. Seek help from us, if can not go back to normal state.
F58	Battery_comm_Lose	1, It tells the communication between hybrid inverter and battery BMS disconnected when “BMS_Err-Stop” is active; 2, If don’t want to see this happen, you can disable “BMS_Err-Stop” item on the LCD; 3, If the fault still exists, please contact us for help
F62	DRMs0_stop	1, the DRM function is for Australia market only; 2, Check the DRM function is active or not; 3, Seek help from us, if can not go back to normal state after restart the system.
F63	ARC_Fault	1. ARC fault detection is only for US market; 2. Check PV module cable connection and clear the fault; 3. Seek help from us, if can not go back to normal state
F64	Heatsink_HighTemp_Fault	Heat sink temperature is too high 1. Check whether the working environment temperature is too high; 2. Turn off the inverter for 10mins and restart; 3. Seek help from us, if can not go back to normal state.

Chart 7-1 Fault information

Under the guidance of our company, customers return our products so that our company can provide service of maintenance or replacement of products of the same value. Customers need to pay the necessary freight and other related costs. Any replacement or repair of the product will cover the remaining warranty period of the product. If any part of the product or product is replaced by the company itself during the warranty period, all rights and interests of the replacement product or component belong to the company.
Factory warranty does not include damage due to the following reasons:

· Damage during transportation of equipment ;
· Damage caused by incorrect installation or commissioning ;
· Damage caused by failure to comply with operation instructions, installation instructions or maintenance instructions ;
· Damage caused by attempts to modify, alter or repair products ;
· Damage caused by incorrect use or operation ;
· Damage caused by insufficient ventilation of equipment ;
· Damage caused by failure to comply with applicable safety standards or regulations ;
· Damage caused by natural disasters or force majeure (e.g. floods, lightning, overvoltage, storms, fires, etc.)

In addition, normal wear or any other failure will not affect the basic operation of the product. Any external scratches, stains or natural mechanical wear does not represent a defect in the product.

8. Datasheet

Model	SUN-29.9K-SG01HP3-EU-BM3	SUN-30K-SG01HP3-EU-BM3	SUN-35K-SG01HP3-EU-BM3	SUN-40K-SG01HP3-EU-BM4	SUN-50K-SG01HP3-EU-BM4
Battery Input Date					
Battery Type	Li-Ion				
Battery Voltage Range(V)	160~800				
Max. Charging Current(A)	50+50				
Max. Discharging Current(A)	50+50				
Max. Charging/Discharging Power(W)	29900	33000	38500	44000	55000
Number of battery input	2				
Charging Strategy for Li-Ion Battery	Self-adaption to BMS				
PV String Input Data					
Max. DC Input Power(W)	38870	39000	45500	52000	65000
Max. DC Input Voltage (V)	1000				
Start-up Voltage(V)	180				
MPPT Range(V)	150-850				
Full Load DC Voltage Range (V)	360-850	360-850	420-850	360-850	450-850
Rated DC Input Voltage (V)	600				
PV Input Current(A)	36+36+36			36+36+36+36	
Max.PV Isc(A)	55+55+55			55+55+55+55	
No. of MPPT Trackers	3			4	
No. of Strings Per MPPT Tracker	2+2+2			2+2+2+2	
AC Output Data					
Rated AC Output and UPS Power(W)	29900	30000	35000	40000	50000
Max. AC Output Power(W)	29900	33000	38500	44000	55000
Peak Power(off grid)	1.5 time of rated power, 10 S				
AC Output Rated Current(A)	45.4/43.4	45.5/43.5	53.1/50.8	60.7/58.0	75.8/72.5
Max. AC Current(A)	45.4/43.4	50/47.9	58.4/55.8	66.7/63.8	83.4/79.8
Max. Three-phase Unbalanced Output Current（A）	60	60	60	70	83.3
Max. Continuous AC Passthrough(A)	200				
Power Factor	0.8 leading to 0.8 lagging				
Output Frequency and Voltage	50/60Hz; 3L/N/PE 220/380, 230/400Vac				
Grid Type	Three Phase				
Total Harmonic Distortion (THD)	<3% (of nominal power)				
DC current injection	<0.5% In				
Efficiency					
Max. Efficiency	97.60%				
Euro Efficiency	97.00%				
MPPT Efficiency	>99%				
Protection					
PV Input Lightning Protection	Integrated				
Anti-islanding Protection	Integrated				
PV String Input Reverse Polarity Protection	Integrated				
Insulation Resistor Detection	Integrated				
Residual Current Monitoring Unit	Integrated				
Output Over Current Protection	Integrated				
Output Shorted Protection	Integrated				
Output Over Voltage Protection	DC Type II / AC Type III				
Battery Over Current Protection	Fuses				

Certifications and Standards	
Grid Regulation	VDE4105,IEC61727/62116,VDE0126,AS4777.2,CEI 0 21,EN50549-1, G98,G99,C10-11,UNE217002,NBR16149/NBR16150
EMC/Safety Regulation	IEC62109-1/-2, NBT32004-2018, EN61000-6-1,EN61000-6-2, EN61000-6-3, EN61000-6-4
General Data	
Operating Temperature Rande(℃)	-40~60℃, >45℃ Derating
Cooling	Smart cooling
Noise(dB)	≤65 dB
Communication with BMS	RS485; CAN
Weight(kg)	80
Size(mm)	527W×894H×294D
Protection Degree	IP65
Permissible Altitude	2000m
Installation Style	Wall-mounted
Warranty	5 years

9. Appendix I

Definition of RJ45 Port Pin for BMS1

No.	RS485 Pin
1	485_B
2	485_A
3	GND_485
4	CAN-H1
5	CAN-L1
6	GND_485
7	485_A
8	485_B

BMS1 Port

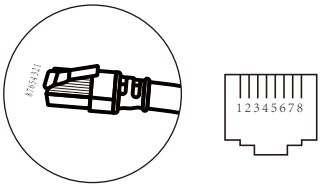

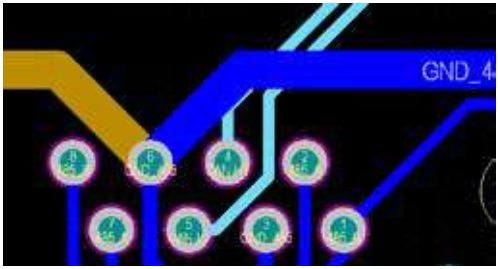

Definition of RJ45 Port Pin for BMS2

No.	RS485 Pin
1	485_B
2	485_A
3	GND_485
4	CAN-H2
5	CAN-L2
6	GND_485
7	485_A
8	485_B

BMS2 Port

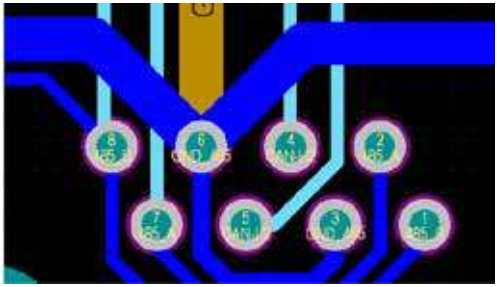

Definition of RJ45 Port Pin for Meter

No.	Meter-485 Pin
1	METER-485_B
2	METER-485_A
3	GND_COM
4	METER-485_B
5	METER-485_A
6	GND_COM
7	--
8	--

Meter Port

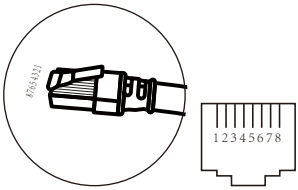

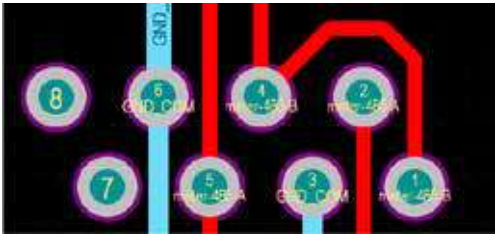

Definition of RJ45 Port Pin for RS485

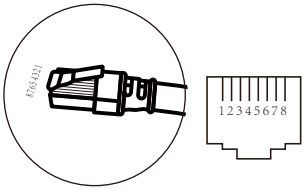

No.	RS485 Pin
1	Modbus-485_B
2	Modbus-485_A
3	GND_485
4	--
5	--
6	GND_485
7	Modbus-485_A
8	Modbus-485_B

RS485 Port

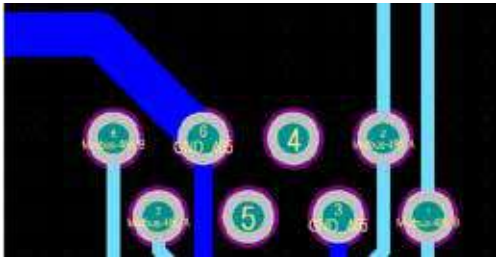

RS232

No.	WIFI/RS232
1	
2	TX
3	RX
4	
5	D-GND
6	
7	
8	
9	12Vdc

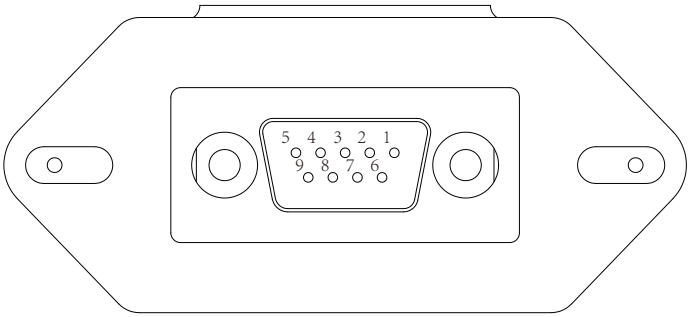

WIFI/RS232

This RS232 port is used to connect the wifi datalogger

10. Appendix II

1. Split Core Current Transformer (CT) dimension: (mm)
2. Secondary output cable length is 4m.

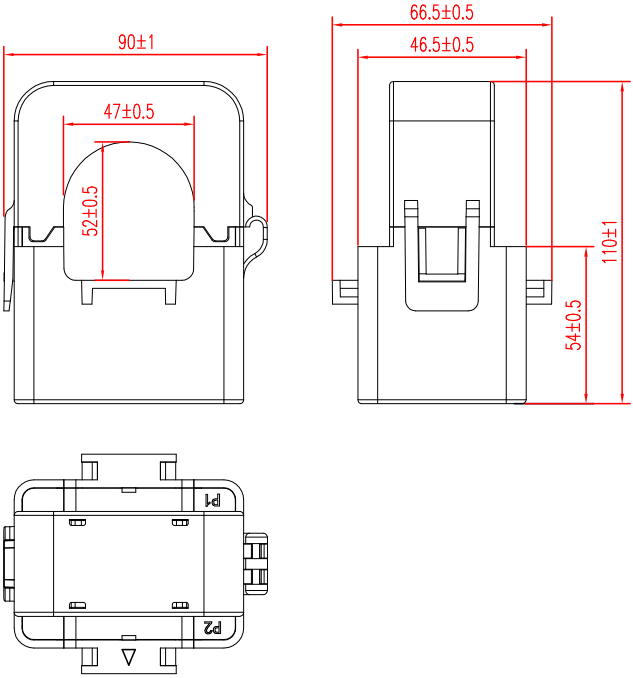

Ver: 2.2, 2023-01-16

NINGBO DEYE INVERTER TECHNOLOGY CO., LTD.

Add: No.26-30, South Yongjiang Road, Beilun, 315806, Ningbo, China

Tel: +86 (0) 574 8622 8957

Fax: +86 (0) 574 8622 8852

E-mail: service@deye.com.cn

Web: www.deyeinverter.com

30240301001477