THREE-PHASE HYBRID INVERTER

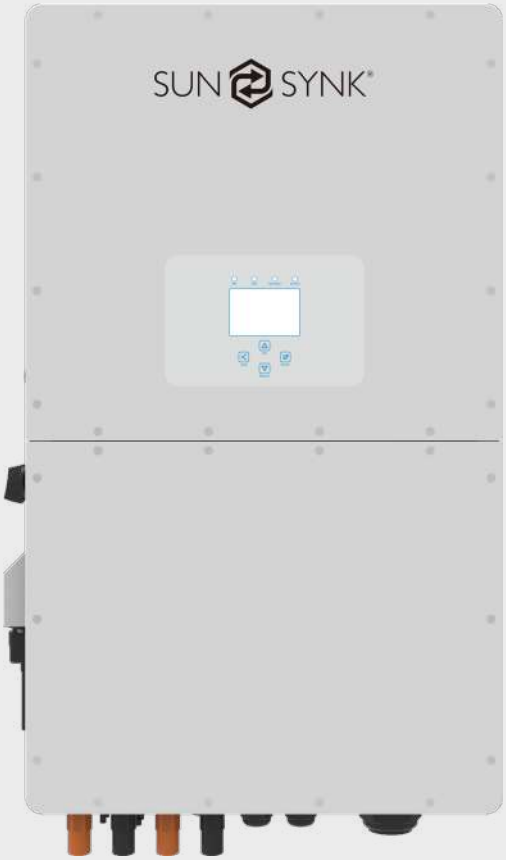

USER MANUAL

SUNSYNK-29.9K-SG01HP3-EU-BM3
SUNSYNK-30K-SG01HP3-EU-BM3
SUNSYNK-35K-SG01HP3-EU-BM3
SUNSYNK-40K-SG01HP3-EU-BM4
SUNSYNK-50K-SG01HP3-EU-BM4

www.sunsynk.com
sales@sunsynk.com
customerservices@sunsynk.com

v.28 (18/07/24)

PLEASE RETAIN FOR FUTURE REFERENCE

PREFACE

This User Manual contains information for proper installation, operation, maintenance, and care of the Sunsynk Three-Phase Hybrid Inverter. A deep understanding of the instructions described in this document will help you get the most out of your new inverter.

This document should be read thoroughly, and all the procedures described in this manual should be followed carefully. If you have questions or concerns about this product's operation and maintenance, please get in touch with our customer support.

All personnel involved in this machine's installation, setup, operation, maintenance, and repair should read and understand this manual, mainly its safety instructions. Substandard performance and longevity, property damage, and personal injury may result from not knowing and following these instructions.

In order to ensure long product life, Sunsynk recommends that you utilize the product and perform maintenance by correctly following the instructions described in this guide. The manufacturer's warranty does not cover any damage resulting from the neglect of these instructions.

Sunsynk assumes no liability for damage caused by the operation contrary to what is specified in this operating manual.

All information in this User Manual is based on the latest product information available at the time of printing approval. Sunsynk reserves the right to make changes at any time without notice and without incurring any obligation.

Please always keep this manual with the inverter as a reference for everyone using this product.

Table of Contents

SAFETY 4
General Safety 4
Symbols/Safety Signs 4
Safety Instructions 6
Product Disposal 6

PRODUCT INTRODUCTION 7
System Overview 7
Product Size 8
Features 9
Basic System Architecture 10
Product Handling Requirements 10

TECHNICAL SPECIFICATIONS 11

INSTALLATION 13
Parts List 13
Selecting the Mounting Area 14
Mounting the Inverter 15
Battery Connection 16
Function Port Definition 18
Grid and Backup Load Connection 19
PV Connection 20
PV Module Selection 20
PV Module Wiring 20
Connecting the CT Coil 22
Meter Connection 23
CHINT Meter 23
Eastron Meter 24
CHINT Meter with CT Coil 25
Eastron Meter with CT Coil 26
Earth Connection (MANDATORY) 27
Wiring System for Inverter 28
Wiring Diagram 29
Typical Application of Diesel Generator 31
Three Phase Parallel Connection 32

OPERATION 33
Switching ON/OFF 33
Display 33
LED Indicators 33
Function Buttons 33
LCD Operation Flow Chart 34
Home page 35
Status Page 35
System Flow Page 36
Setup Page 37
Basic Setup 38
Set Time (Clock) 38
Set Company Name / Beeper / Auto dim 38
Factory Reset and Lock Code 39
Inverter Remote Control 40
Battery Setup Page 40
Generator & Battery Page 41
Battery Discharge Page 43
Setting Up a Lithium Battery 44
Program Charge & Discharge Times 47
Grid Supply Page 51
Paralleling Inverters Advanced Settings 54
Connecting the DRM's 56
Solar Power Generated 57
Grid Power 57
Advanced Settings for Auxiliary Load 58

OPERATION MODES 60
Mode I: Basic 60
Mode II: With Generator 60
Mode III: With Aux-Load 61
Mode IV: AC Couple 61
Mode V: Grid-Tied 62

WARRANTY 62

TROUBLESHOOTING 63

COMMISSIONING 68
Start-Up / Shutdown Procedure 68
Inverter Commissioning Info 68
GDFI Fault 69

MAINTENANCE 69

APPENDIX A 69

APPENDIX B 70

SAFETY

General Safety

- This device should only be used in accordance with the instructions within this manual and in compliance with local, regional, and national laws and regulations. Only allow this device to be installed, operated, maintained, and repaired by other people who have read and understood this manual. Ensure the manual is included with this device should it be passed to a third party.
- DO NOT allow minors, untrained personnel, or person(s) suffering from a physical or mental impairment that would affect their ability to follow this manual, install, maintain or repair this device.
- Any untrained personnel who might get near this device while it is in operation MUST be informed that it is dangerous and instructed carefully on how to avoid injury.

Symbols/Safety Signs

	This symbol indicates information that if ignored, could result in personal injury, physical damage or even death due to incorrect handling.		CE mark is attached to the solar inverter to verify that the unit follows the provisions of the European Low Voltage and EMC Directives.
	Risk of burn.		Keep the equipment well-ventilated.
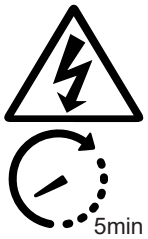	Risk of electric shock. DO NOT touch the terminal or remove the shell within 5 minutes after disconnecting all power.		The UKCA marking is used for products placed on the market in Great Britain (England, Scotland and Wales). The UKCA marking applies to most products for which the CE marking could be used.
	This product's batteries contain an explosive, self-reactive material that could blow up when heated.		Do not disassemble or alter the battery in any way. Do not strike or puncture the battery.
	The Battery is heavy and can cause injury if not handled safely.		ONLY qualified personnel should install or perform maintenance work on the units.
	Be careful when touching the inverter! It is an electrical product with risk of electric shock and heating.		Warranty Void if Seal is Broken
	Do not place near open fire or incinerate. Do not use near heaters or hot temperature sources.		Keep the product out of reach of children!
	Do not stand on.		Avoid unsuitable shoes for installing and operating the inverter.
	Do not step or put any objects onto the battery.		Do not drop, deform, or impact the battery.

1	Single Phase.	3	Three Phase.
	Protective Conductor Terminal or Earth Ground Terminal.		Rechargeable.
	Do not submerge the battery in water or expose it to moisture or liquid		Keep out of reach of children, animals, and insects.
	Do not expose the product to sunlight.		Inverter DC to AC.
	Li-ion Battery.	KG	Net Weight in Kilograms.
	BATTERY INPUT Battery Discharge Voltage, Battery Discharge Current, Input Voltage Type, Battery Discharge Power.		**PV INPUT** PV Input Voltage, Number of MPPT's, MPPT Input Current & Max PV ISC.
	Direct Current.		Indicates that this product is recyclable.
	AC OUTPUT Output Voltage, Input Voltage Type, Ac Output Rated Current, Max AC Current, Output Frequency, Max AC ISC, Power Factor & AC Output Rated Power.		**CONTINUOUS OUTPUT CURRENT** Maximum Continuous Output Current, Output Frequency and Voltage, & AUX (programmable AC output on battery SOC).
	Charging.		Discharging.
25°C	Follow the indicated temperatures.	°C °C	**TEMPERATURE** Ambient, Min & Max.
	MANUAL DOWNLOAD Download the latest version of the instruction manual by scanning the QR code.		**WARRANTY REGISTRATION** Scan the QR code to access our website and sign up for the manufacturer's warranty.
	Do not dispose the device, accessories, and packaging with regular waste. Follow local ordinances or contact the manufacturer for disposal guidance.		Refer to the operating instructions. Contact the supplier within 24 hours if there is anything wrong. In case of leakage contact with eyes or skin, immediately clean with water and seek help from a doctor.

SUN SYNK®

Safety Instructions

WARNING

HIGH LIFE RISK DUE TO FIRE OR ELECTROCUTION.

Sunsynk Three-Phase Hybrid Inverter can only be installed by a qualified licensed electrical contractor. This is not a DIY product.

- This chapter contains important safety and operating instructions. Read and keep this manual for future reference.
- Before using the inverter, please read the instructions and warning signs of the battery and corresponding sections in the instruction manual.
- Do not disassemble the inverter. If you need maintenance or repair, take it to a professional service center.
- Improper reassembly may result in electric shock or fire.
- To reduce risk of electric shock, disconnect all wires before attempting any maintenance or cleaning.
- Turning off the unit will not reduce this risk.
- Never charge a frozen battery.
- For optimum operation of this inverter, please follow required specification to select appropriate cable size. It is very important to correctly operate this inverter.
- Be very cautious when working with metal tools on or around batteries. Dropping a tool may cause a spark or short circuit in batteries or other electrical parts, even cause an explosion.
- Please strictly follow installation procedure when you want to disconnect AC or DC terminals.
- Please refer to "Installation" section of this manual for the details.
- Grounding instructions - this inverter should be connected to a permanent grounded wiring system. Be sure to comply with local requirements and regulation to install this inverter.
- Never cause AC output and DC input short circuited. Do not connect to the mains when DC input short circuits.

Product Disposal

DO NOT dispose this product with domestic waste!

Electrical devices should be disposed of in accordance with regional directives on electronic and/ or electronic-waste disposal. In case of further questions, please consult your supplier. In some cases, the supplier can take care of proper disposal.

PRODUCT INTRODUCTION

The Sunsynk Three-Phase Hybrid Inverter is a multifunctional inverter, combining functions of inverter, solar charger and battery charger to offer uninterruptible power support with portable size. Its comprehensive LCD display offers user configurable and easy accessible button operation such as battery charging, AC/solar charging, and acceptable input voltage based on different applications.

System Overview

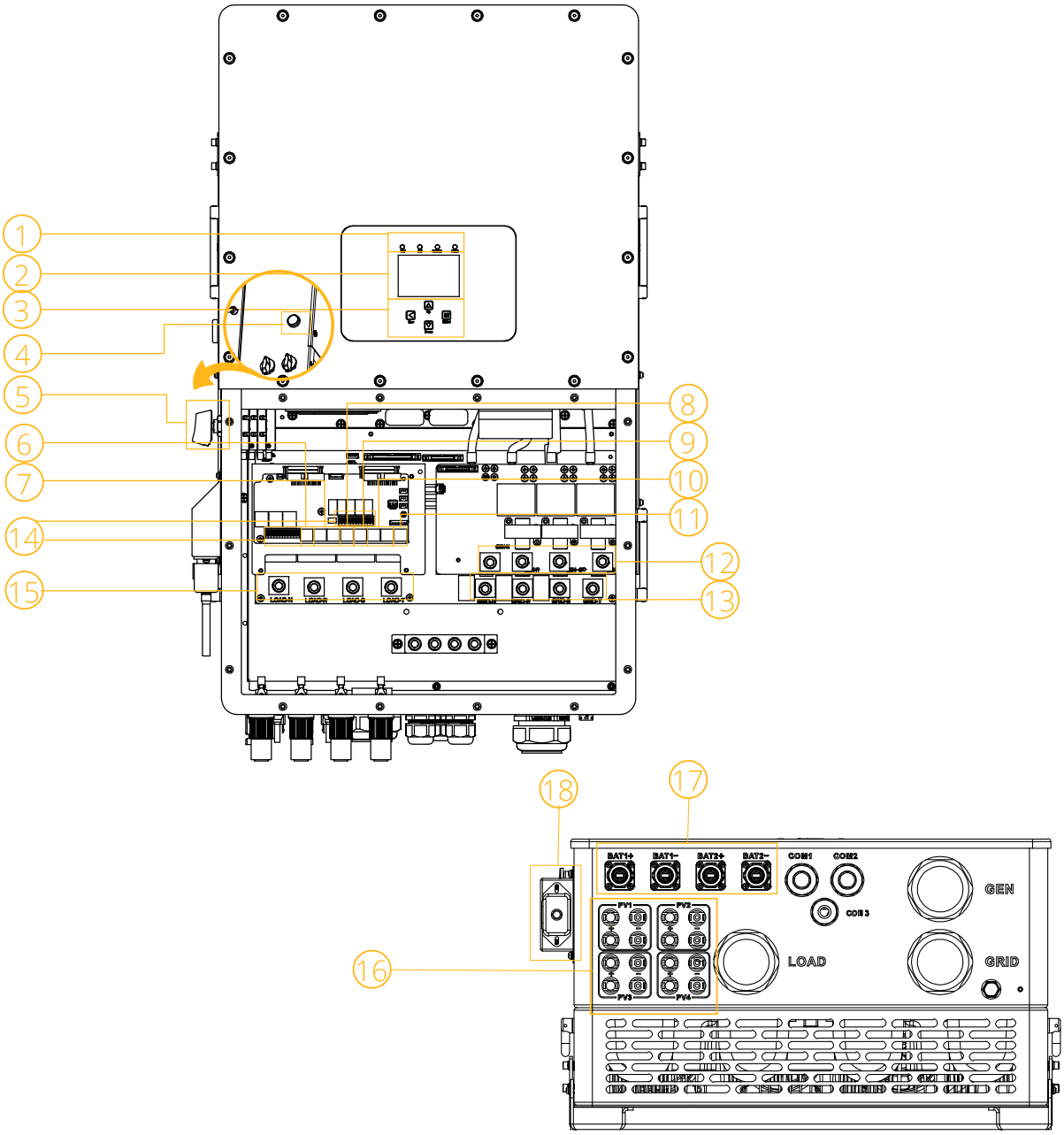

1. Inverter Indicators
2. LCD Display
3. Function Buttons
4. Power on/off button
5. DC switch
6. Meter Port
7. Parallel Port
8. CAN Port
9. DRM Port
10. BMS Port
11. RS485 Port
12. Generator Input
13. Grid
14. Function Port
15. Load
16. PV Input
17. Battery Input
18. WiFi Interface

Product Size

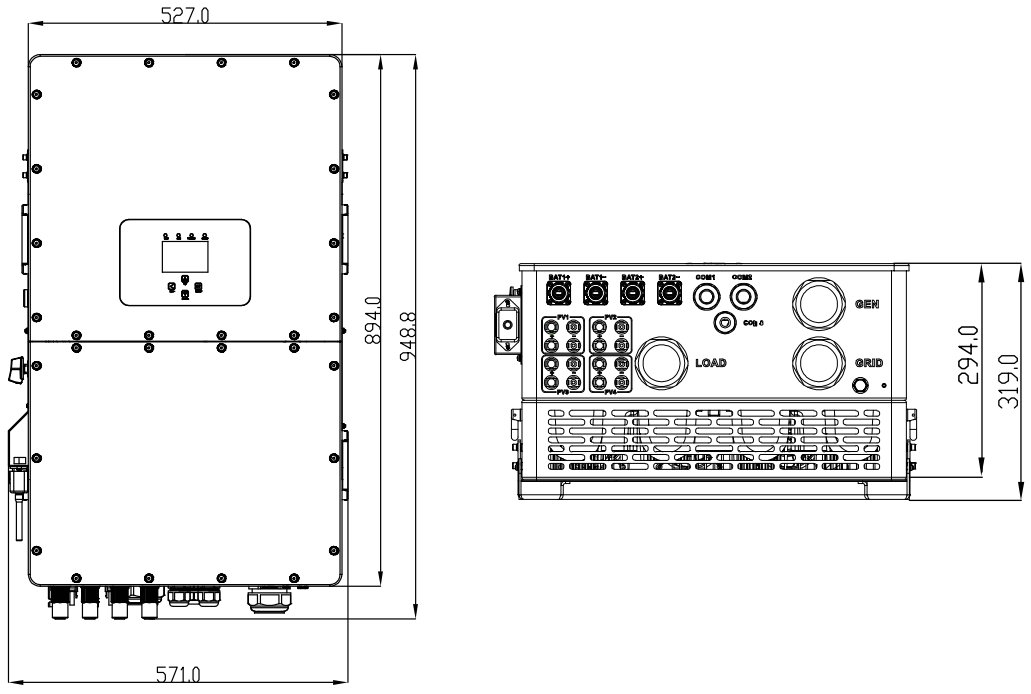

Inverter Size

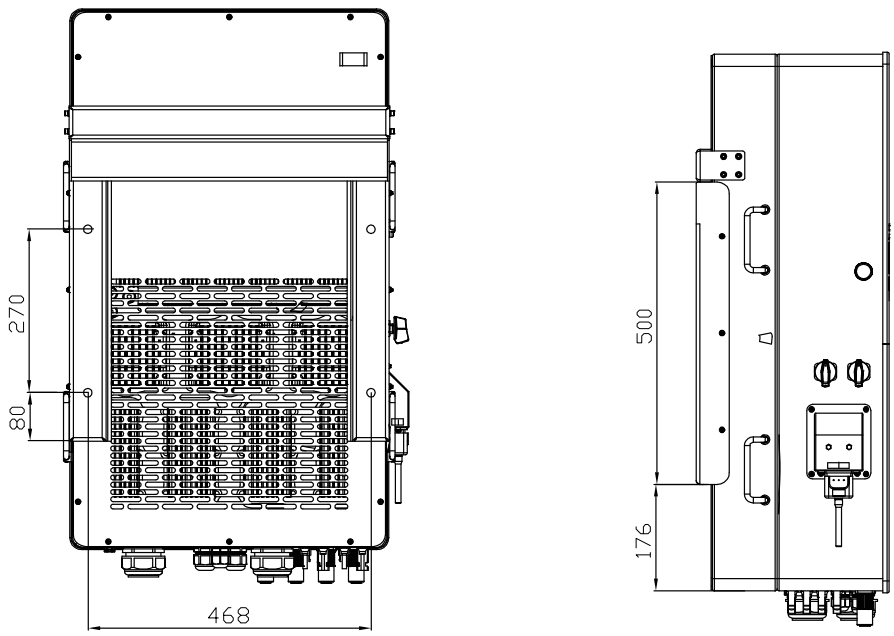

Features

INTERACTIVE

- Easy and straightforward to understand LCD display;
- Supporting Wi-Fi or GSM monitoring;
- Visual power flow screen;
- 4 MPPT inputs and 2 strings per input;
- Smart settable 3-stage MPPT charging for optimised battery performance;
- Auxiliary load function;
- Multi-inverter function: grid-tied and off-grid;

COMPATIBLE

- Compatible with mains electrical grid voltages or power generators;
- Compatible with wind turbines;
- 230V/400V Three-phase Pure Sinewave Inverter;
- It can power up both single-phase and 3-phase loads;
- Self-consumption and feed-in to the grid;
- Auto restart while AC is recovering;
- Maximum charging/discharging current of 50A + 50A;
- DC and AC coupled to retrofit existing solar system;
- Compatible with high-voltage batteries (500-800Vdc battery input);

CONFIGURABLE

- Fully programmable controller;
- Programmable supply priority for battery or grid;
- Programmable multiple operation modes: on-grid/off-grid & UPS;
- Configurable battery charging - current/voltage based on applications by LCD setting;
- Configurable AC / solar / generator charger priority by LCD setting;
- 6 time periods for battery charging/discharging;

SECURE

- Overload/over-temperature/short-circuit protection;
- Smart battery charger design for optimised battery protection;
- Limiting function installed to prevent excess power overflow to the grid;
- Isolation transformer design;

APPLICATIONS

- Marine (vessel power management);
- Power shedding (home/office/factory);
- UPS (fuel-saving systems);
- Remote locations with solar and wind generators;
- Building sites;
- Telecommunication;

Basic System Architecture

The following diagram explains the basic application and architecture of this 3-Phase Inverter.

It also includes the following devices to have a Complete running system.

- Generator or Utility
- PV modules
- Batteries
- Normal and smart loads
- Monitoring system

Consult with your system integrator for other possible system architectures depending on your requirements.

This inverter can power all kinds of appliances in the home or office environment, including motor-type appliances such as refrigerators and air conditioners.

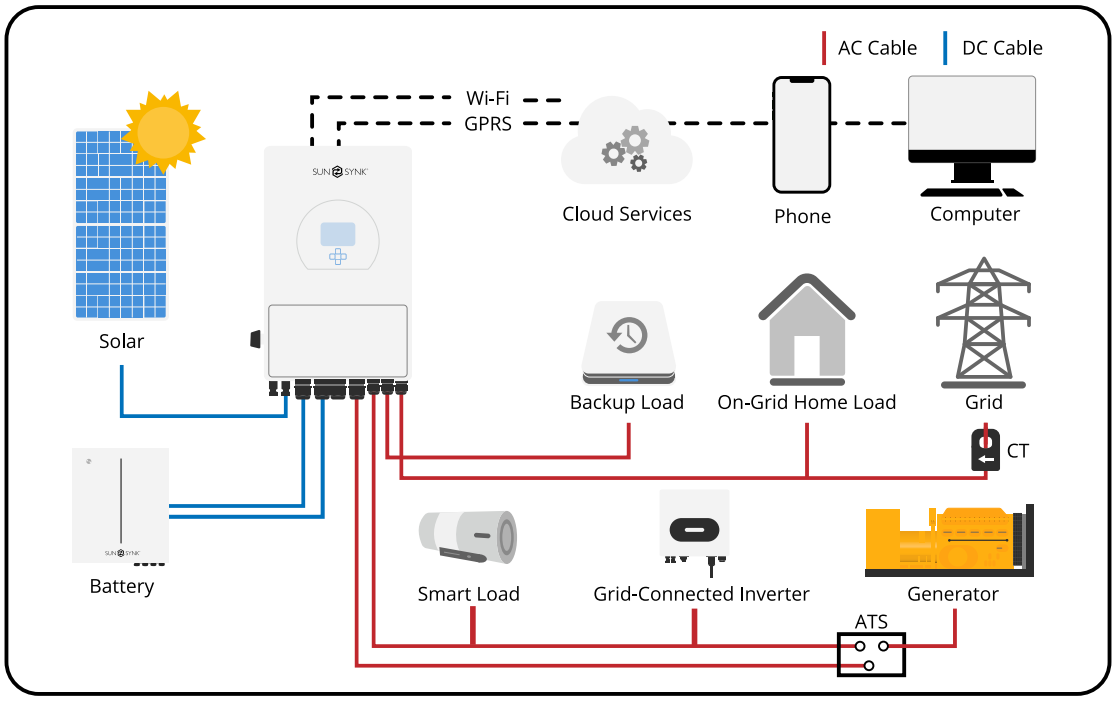

Product Handling Requirements

Two people stand on both sides of the machine, holding two handles to lift the machine.

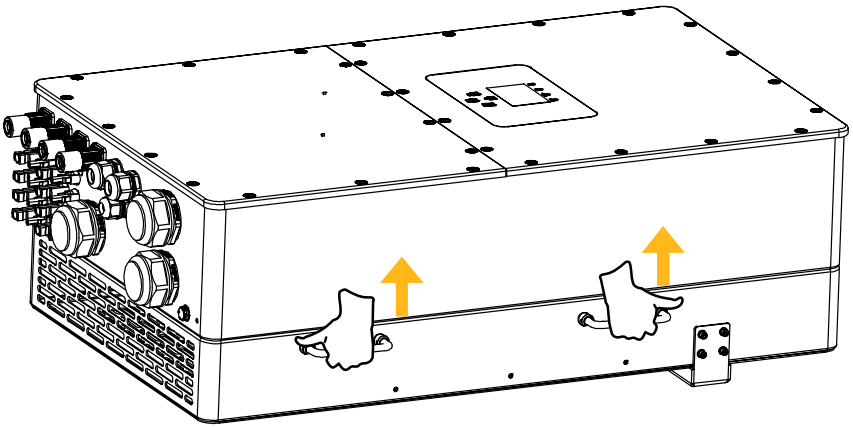

Transport

TECHNICAL SPECIFICATIONS

Model	SUNSYNK-29.9K-SG01HP3-EU-BM3	SUNSYNK-30K-SG01HP3-EU-BM3	SUNSYNK-35K-SG01HP3-EU-BM3	SUNSYNK-40K-SG01HP3-EU-BM4	SUNSYNK-50K-SG01HP3-EU-BM4
Battery Input Data					
Battery Type	Lithium-ion				
Battery Voltage	160~700V				
Max. Charging Current	50+50A				
Max. Discharging Current	50+50A				
Max. Charging/Discharging Power	29900W	33000W	38500W	44000W	55000W
Charging Strategy for Li-Ion Battery	Self-Adaptation to BMS				
Number of Battery Input	2				
PV String Input Data					
Max. PV Input Power	38870W	39000W	45500W	52000W	65000W
Max. PV Input Voltage	1000V				
Start-up Voltage	180V				
MPPT Range	150~850V				
Full Load MPPT Voltage Range	360-850V		420-850	360-850V	450-850V
Rated PV Input Voltage	600V				
Max. Input Short Circuit Current	55+55+55+55A			55+55+55+55A	
Max. Operating PV Input Current	36+36+36+36A			36+36+36+36A	
No. of MPPT/No. of String per MPPT	4/2+2+2+2			4/2+2+2+2	
Max. Inverter Backfeed Current To the Array	0				
AC Output Data					
Rated AC Input/Output Active Power	29900W	30000W	35000W	40000W	50000W
Max. AC Input/Output Apparent Power	29900W	33000W	38500W	44000W	55000W
Peak Power (off-grid)	1.5 times rated power, 10sec				
Rated AC Input/Output Current	45.4/43.4A	45.5/43.5A	53.1/50.8A	60.7/58.0A	75.8/72.5A
Max. AC Input/Output Current	45.4/43.4A	50/47.9A	58.4/55.8A	66.7/63.8A	83.4/79.8A
Max. Continuous AC Passthrough (grid to load)	200A				
Max Three Phase Unblanaced Output Current	60A			70A	83.4A
Rated Input/Output Voltage Range	220/380V, 230/400V 0.85Un-1.1Un				
Grid Connection Form	3L+N+PE				
Rated Input/Output Grid Friquency	50Hz/45-55Hz, 60Hz/55-65Hz				
Power Factor Adjustment Range	0.8 leading to 0.8lagging				
Total Current Harmonic Distortion THDi	<3% (of nominal power)				
DC Injection Current	<0.5% In				
Efficiency					
Max. Efficiency	97.60%				
Euro Efficiency	97.00%				
MPPT Efficiency	>99.00%				
Communication					
Communication Interface	RS485/RS232/CAN				
Monitor Mode	GPRS/WIFI/Bluetooth/4G/LAN(optional)				
Protection					
Integrated	DC Polarity Reverse Connection Protection, AC Output Overcurrent Protection, AC Output Overvoltage Protection, AC Output Short Circuit Protection, Thermal Protection, DC Terminal Insulation Impedance Monitoring, DC Component Monitoring, Ground Fault Current Monitoring, Power Network Monitoring, Island Protection Monitoring, Earth Fault Detection, DC Input Switch, Overvoltage Load Drop Protection, Residual Current (RCD) Detection, Surge protection level				
Surge Protection Level	TYPE II (DC), TYPE II (AC)				

Certifications and Standards	
Grid Connection Standard	EN 50549-1, AS-NZS 4777.2, NRS 097-2-1; Additional connections available upon request
EMC/Safety Standards	IEC/EN 61000-6-1/2/3/4, IEC/EN 62109-1, IEC/EN 62109-2
General Data	
Operating Temperature Range	-40 to +60ºC, >45ºC Derating
Permissible Altitude Humidity	0~100%
Permissible Altitude	2000m
Noise	<65 dB
Ingress Protection (IP)	IP65
Inverter Topolgy	Non-Isolated
Over Voltage Category	OVC II (DC), OVC III (AC)
Size	527*894*294mm
Weight	80kg
Warranty [1]	5/10 years (with battery)
Type of Cooling	Intelligent Cooling

[1] The warranty period depends on the final installation site of the inverter, more info please refer to Warranty Policy.

NOTE:

Safe Transport and Handling of Inverter:

When transporting the equipment, use its original packaging and keep it as a complete unit. Store the product in a dry environment, avoiding direct sunlight, and maintain a temperature range between -40°C and 60°C. Since the equipment can be quite heavy, always consider its total weight when moving, transporting, or installing it, ensuring that the installation site has adequate load-bearing capacity. Transporting and installing the inverter should be carried out solely by qualified personnel.

INSTALLATION

Parts List

Check the equipment before installation. Please make sure nothing is damaged in the package. You should have received the items in the following package:

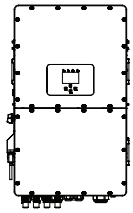

Hybrid Inverter x1

Wall Mounting Bracket x1

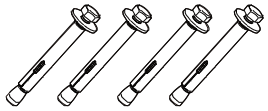

Stainless Steel Anti-Collision Bolt M12x60 x4

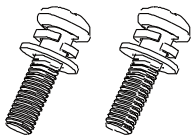

Stainless Steel Mounting Screws M4*12 x2

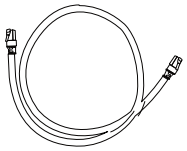

Parallel Communication Cable x2

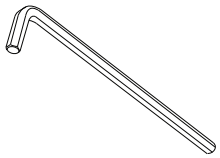

L-type Hexagon Wrench x1

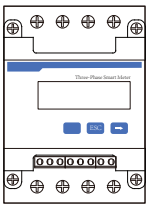

Meter (Opitional) x1

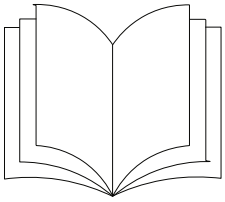

User Manual x1

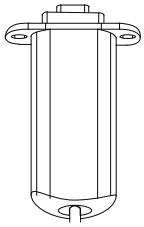

Data Logger x1

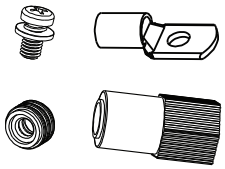

Battery Plug Connectors x4

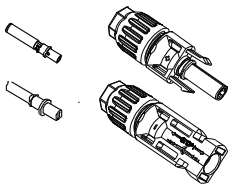

DC+/DC- Plug Connector Including Metal Terminal xN

T-type Wrench x1

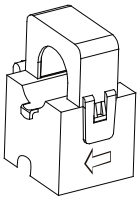

Sensor Clamp x3

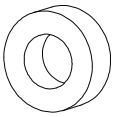

BMS Magnetic Ring x2

Selecting the Mounting Area

For proper heat dissipation, allow a clearance of approximately 500mm to the side, 500mm above and below the unit, and 1000mm to the front of the unit.

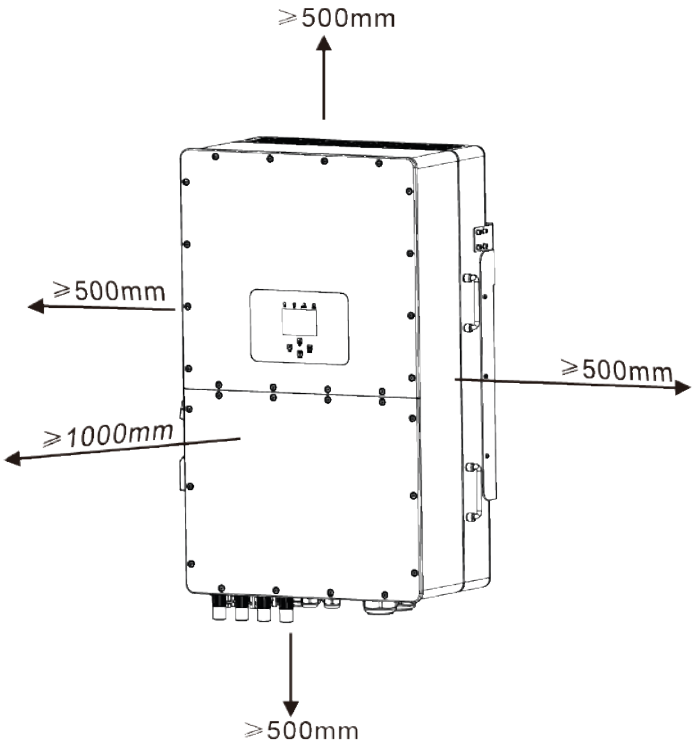

DO NOT install the inverter in the following areas:

- Areas with high salt content, such as the marine environment. It will deteriorate the metal parts and possibly lead to water/dampness penetrating the unit.
- Areas filled with mineral oil or containing splashed oil or steam, such as those found in kitchens. It will deteriorate plastic parts of the unit, causing those parts to fail or allowing water/damp to penetrate the unit.
- Areas that generate substances that adversely affect the equipment, such as sulphuric gas, chlorine gas, acid, or alkali. These can cause the copper pipes and brazed joints to corrode and fail to conduct electricity reliably.
- Areas that can cause combustible gas to leak, which contains suspended carbon-fibre or flammable dust, or volatile inflammable such as paint thinner or gasoline.
- Areas where there may be gas leaks and where gas may settle around the unit as this is a fire risk.
- Areas where animals may urinate on the unit or ammonia may be generated.
- High altitude areas (over 2000 metres above sea level).
- Environments where precipitation or humidity is above 95%
- Areas where the air circulation is too low.

ALSO CONSIDER:

- Installing the indoor unit, outdoor unit, power supply cable, transmission cable, and remote control cable at least 1 metre away from any television or radio receiver. This will prevent TV reception interference or radio noise. This will prevent radio signal interference from external units that might interfere with the Wi-Fi or GSM monitoring.

- If children under 10 years old may approach the unit, take preventive measures so they cannot reach and touch the unit.
- Install the indoor unit on the wall where the floor height is higher than 1600mm.

Before connecting all wires, please take the metal cover off, removing the screws as shown below:

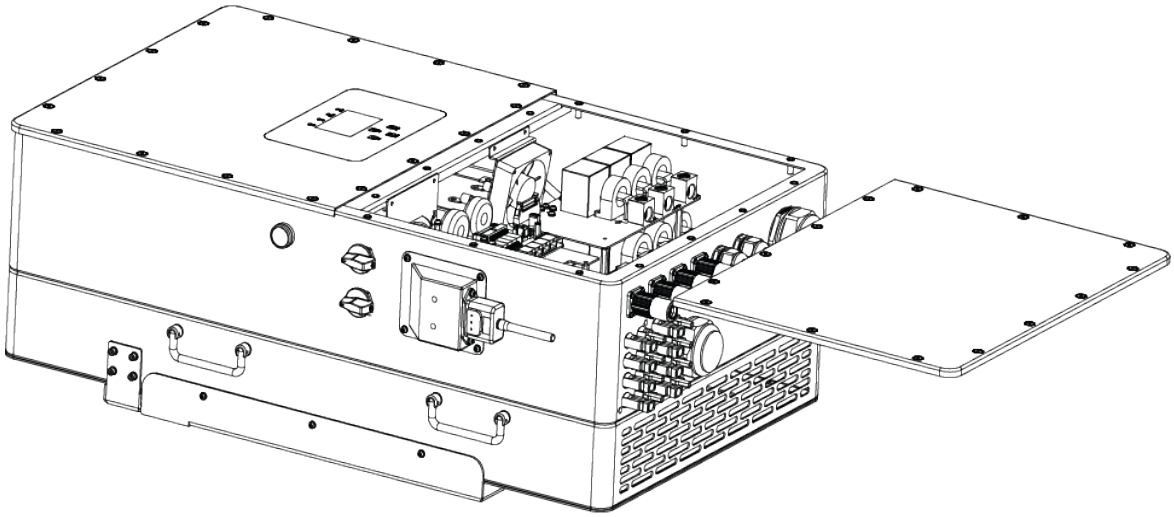

Mounting the Inverter

- Select installation locations that are adequate to support the weight of the converter.
- Install this inverter at eye level to allow the LCD to be read anytime.
- To ensure optimal operation, an appropriate ambient temperature is between -40 and 60°C.
- Be sure to keep other objects and surfaces, as shown in the figure to guarantee sufficient heat dissipation and have enough space to remove wires.

WARNING

Risk of injury (Heavy Object).

Remember that this inverter is heavy, so users must carefully handle the unit during installation, especially when mounting or removing it from a wall.

Choose the recommended drill head (as shown below) to drill 4 holes on the wall, 62-70mm deep.

1. Use a proper hammer to fit the expansion bolt into the holes.
2. Carry the inverter and hold it, ensure the hanger aims at the expansion bolt, and fix the inverter on the wall.
3. Fasten the screw head of the expansion bolt to finish the mounting.

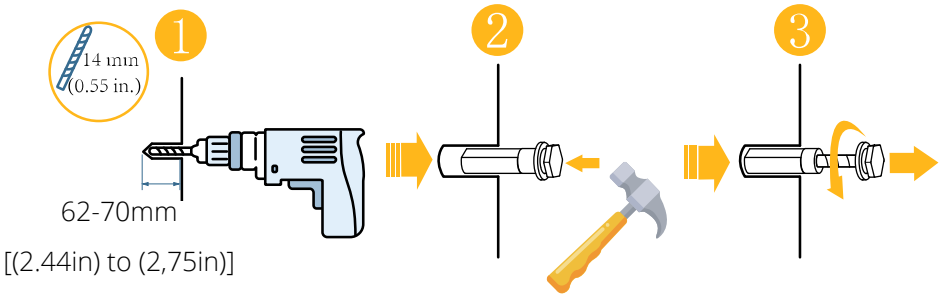

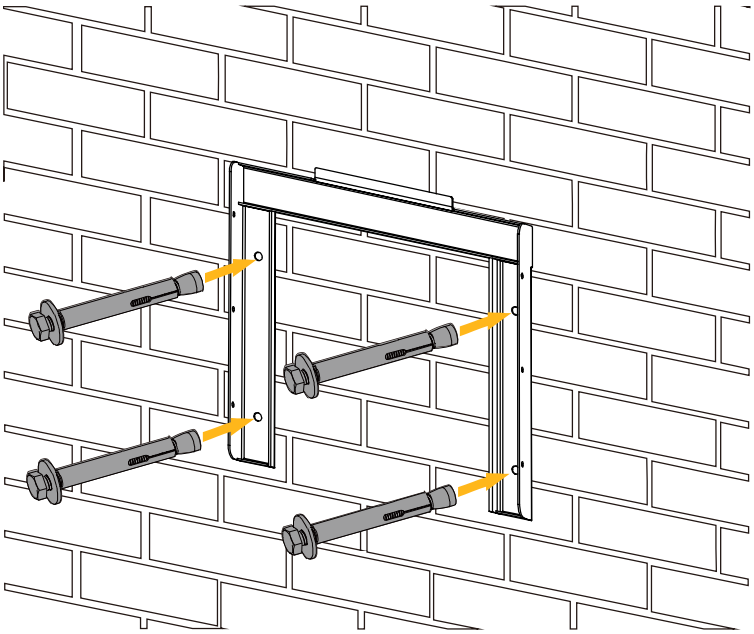

Inverter Hanging Plate Installation

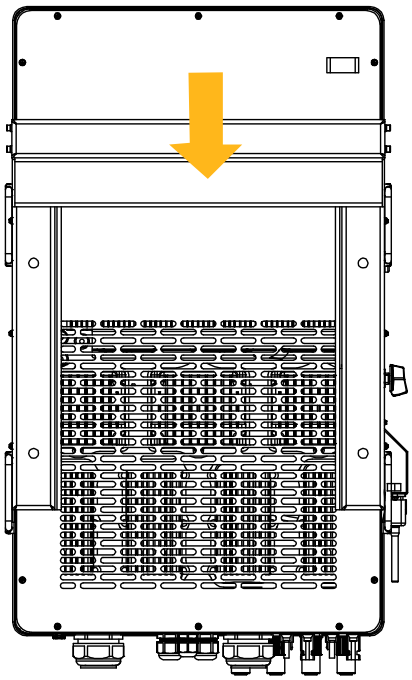

Battery Connection

For safe operation and compliance, an individual DC overcurrent protector or disconnection device is required to connect the battery and the inverter. Users are recommended to utilise a suitable fuse and DC isolator (see next page). Switching devices may not be required in some applications, but overcurrent protectors must be used. Please refer to the typical amperage in the table below for the required fuse or circuit breaker size.

Model	Cross Section (mm^2)	
	Range	Recommended Value
29.9/30/35/40/50kW	10.0~16.0 (6~4AWG)	10.0 (6AWG)

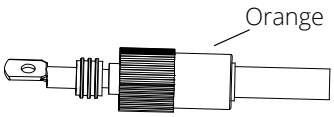

BAT+ Plug Connector

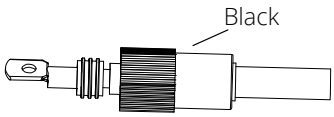

BAT- Plug Connector

WARNING

Reverse Polarity.

Before making the final DC connection or closing DC breaker/disconnect, be sure positive (+) must be connected to the positive (+) and negative (-) must be connected to the negative (-). A reverse polarity connection on the battery will damage the inverter.

All wiring/connecting must be performed by qualified personnel. In addition, connecting the battery with a suitable cable is essential for safe and efficient operation of the system.

Please follow below steps to implement battery connection:

1. Pass the cable through the terminal:

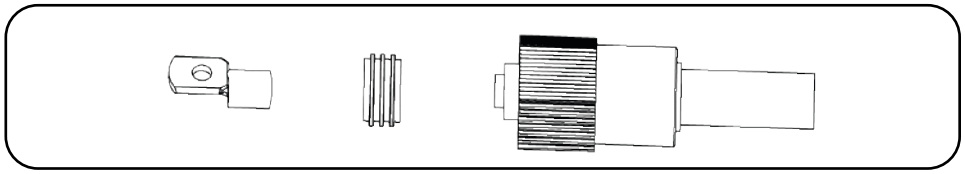

2. Put on the rubber ring:

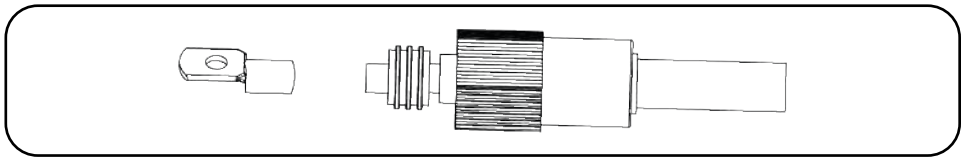

3. Crimp terminals:

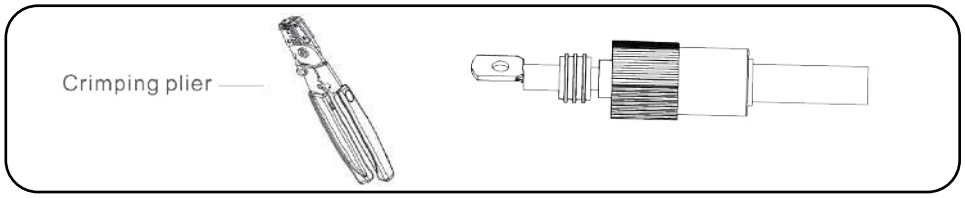

4. Fasten terminal with a bolt:

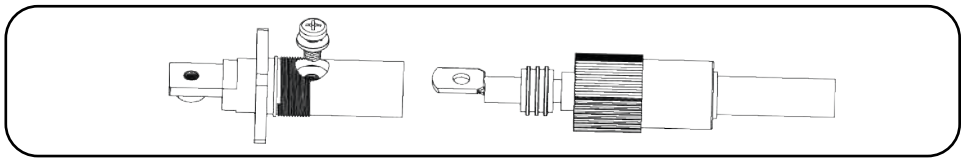

5. Fasten the terminal with outer cover:

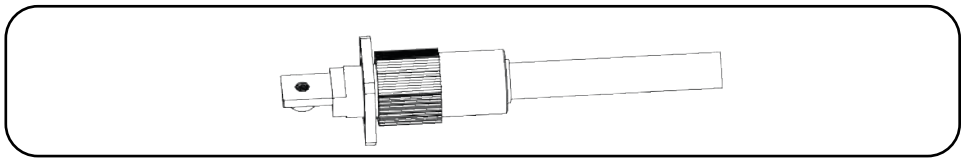

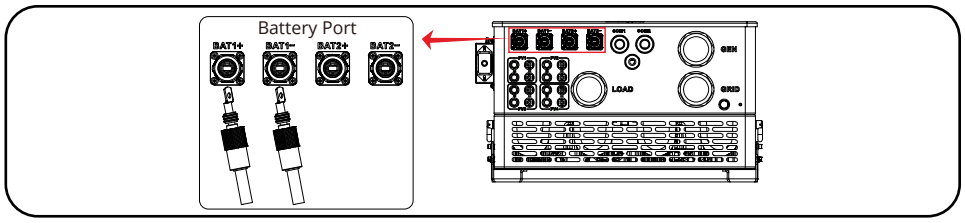

BMS connection

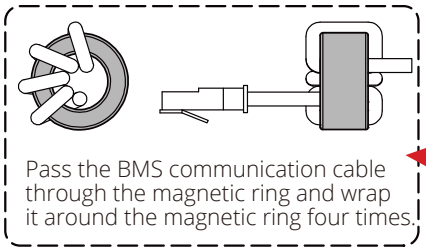

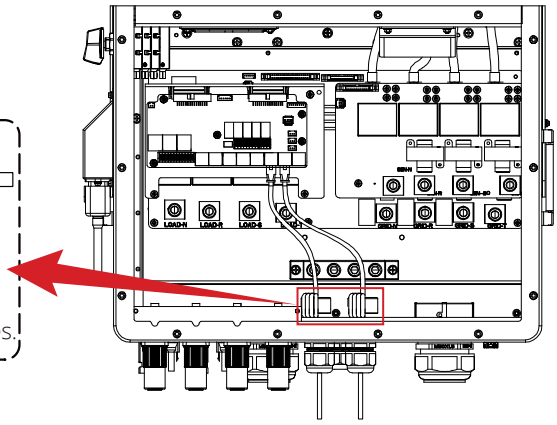

Function Port Definition

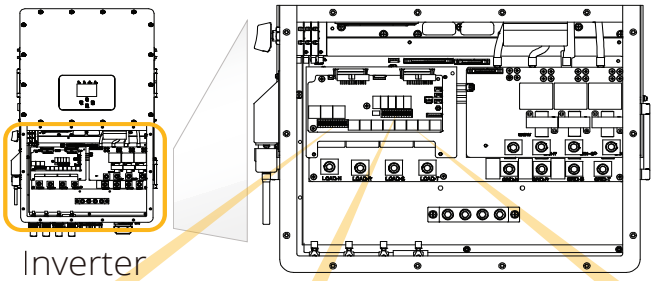

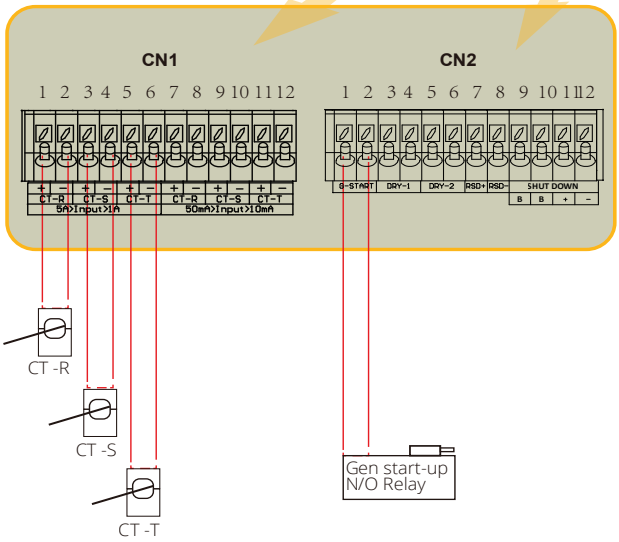

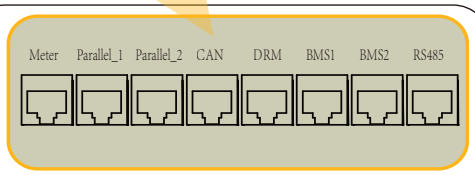

Meter: For energy meter communication.
Parallel A: Parallel communication port 1 (CAN interface).
Parallel B: Parallel communication port 2 (CAN interface).
CAN: Reserved.
DRM: Logic interface for AS/NZS 4777.2:2020.
BMS1: BMS port for battery communication port 1.
BMS2: BMS port for battery communication port 2.
RS485: RS485 port.

CN1:

CT-R (1,2,7,8): Current transformer (CT-R) for "zero export to CT" mode clamps on L1 when in three phase system.
CT-S (3,4,9,10): Current transformer (CT-S) for "zero export to CT" mode clamps on L2 when in three phase system.
CT-T (5,6,11,12): Current transformer (CT-T) for "zero export to CT" mode clamps on L3 when in three phase system.

CN2:

G-Start (1,2): Dry contact signal for startup the diesel generator. When the "GEN signal" is active, the open contact (GS) will switch on (no voltage output).
Dry-1 (3,4): Dry contact output. When the inverter is in off-grid mode and the "Signal ISLAND MODE" is checked, the dry contact will switch on.
Dry-2 (5,6): Reserved.
RSD+, RSD- (7,8): When the battery is connected and the inverter is in "ON" status, it will provide 12Vdc.
SHUT DOWN (9,10,11,12): When the terminal "B" & "B" is short-circuited with additional wire connection, or there is 12Vdc input at the terminal "+ & -", then the 12Vdc of RSD+ & RSD- will disappear immediately.

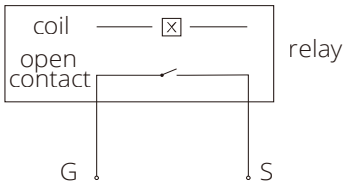

GS (diesel generator startup signal)

Grid and Backup Load Connection

Before connecting to the grid, please install a separate AC breaker between the inverter and the grid. Also, it is recommended that is installed an AC breaker between the backup load and inverter. This will ensure that the inverter can be securely disconnected during maintenance and fully protected from overcurrent. For the 29.9/30/35/40/50KW model, the recommended AC breaker for the backup load is 240A. For the 29.9/30/35/40/50KW model, the recommended AC breaker for grid is 240A.

There are three terminal blocks marked as GRID, LOAD, and GEN. Please do not confuse input and output connections. External AC SPD is compulsory on all Sunsynk inverters.

WARNING

All wiring must be performed by qualified personnel. System safety and efficient operation need to use appropriate cable for AC input connection. To reduce the risk of injury, please use the proper recommended cables as below. Please follow local country wiring regulations as stipulated in SANS code.

Grid connection and backup load connection (Copper wires) (bypass)

Model	Wire Size	Cable (mm²)	Torque Value (max)
29.9/30/35/40/50kW	4/0 AWG	95	28.2Nm

Grid connection and backup load connection (Copper wires)

Model	Wire Size	Cable (mm²)	Torque Value (max)
29.9/30/35kW	6 AWG	10	12.4Nm
40kW	4 AWG	16	12.4Nm
50kW	2 AWG	25	16.9Nm

Please follow the steps below to implement GRID, LOAD, and GEN port connections:

1. Before making GRID, LOAD, and GEN port connections, make sure to turn off the AC breaker or disconnector first.
2. Remove a 10mm sleeve from each wire, unscrew the bolts, insert the cables according to the polarities indicated on the terminal block and tighten the terminal screws. Ensure the connection is complete.

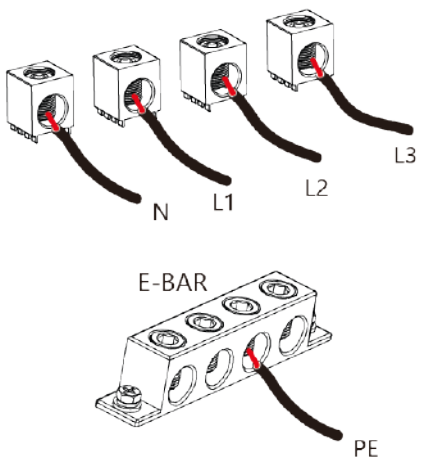

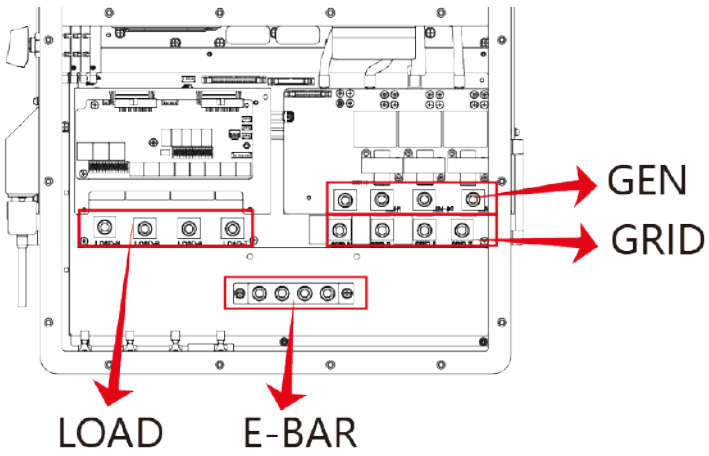

WARNING

Ensure the AC power source is disconnected before attempting to wire it to the unit.

3. Then, insert AC output wires according to the polarities indicated on the terminal block and tighten the terminal. Make sure to connect corresponding N wires and PE wires to related terminals as well.
4. Ensure the wires are securely connected.
5. Appliances such as air conditioners require at least 2-3 minutes to restart because it requires enough time to balance refrigerant gas inside the circuit. If a power shortage occurs and recovers in a short time, it will cause damage to your connected appliances. To prevent this kind of damage, please check with the air conditioner manufacturer if it is equipped with a time-delay function before installation. Otherwise, this inverter will trigger an overload fault and cut off output to protect your appliance, but sometimes it still causes internal damage to the air conditioner

PV Connection

Before connecting to PV modules, please install a separate DC circuit breaker between the inverter and PV modules. It is very important for system safety and efficient operation to use appropriate cable for PV module connection.

WARNING

To avoid malfunction, do not connect any PV modules with possible leakage current to the inverter. For example, grounded PV modules will cause leakage current to the inverter. When using PV modules, please ensure the PV+ & PV- of the solar panel are not connected to the system ground bar.

It is requested to use a PV junction box with surge protection. Otherwise, it will cause damage to the inverter when lightning occurs on PV modules. Always work on the MPPT Voltage range and do not exceed 850Vdc on MPPT strings.

PV Module Selection

When selecting proper PV modules, please be sure to consider below parameters:

1. Open circuit voltage (Voc) of PV modules can not exceed the max. PV array open circuit voltage of the inverter.
2. Open circuit voltage (Voc) should be higher than min. start voltage and lower or equal to 850Vdc.
3. The PV modules connected to this inverter shall be Class A rating certified according to IEC 61730.

Inverter Model	29.9kW	30kW	35kW	40kW	50kW
PV Input Voltage	600V (180~1000V)				
PV Array MPPT Voltage Range	150-850V				
No. Of MPP Trackers	3			4	
No. Of Strings per MPP Tracker	2+2+2			2+2+2+2	

PV Module Wiring

1. Switch the Grid Supply Main Switch (AC) OFF.
2. Switch the DC isolator OFF.
3. Assemble PV input connector to the inverter.
4. Use the MC4 connectors supplied by Sunsynk with the inverter.

WARNING

Before connection, please ensure the polarity of the output voltage of the PV array matches the DC+ and DC- symbols.

Please do not connect the PV array's positive and negative poles to the system ground bar. This can seriously damage the inverter.

Before connecting the inverter, please make sure the PV array open-circuit voltage is within the maximum limit of the inverter.

Please utilise an approved DC cable for the PV system.

Cable Type	Cross Section (mm^2)	
	Range	Recommended Value
Industry generic PV cable (model: PV1-F)	2.5~4 (12~10AWG)	2.5 (12AWG)

The correct steps in assembling the DC connector are explained below:

1. Strip 7mm of the plastic coating off the DC wire and disassemble the connector cap nut.

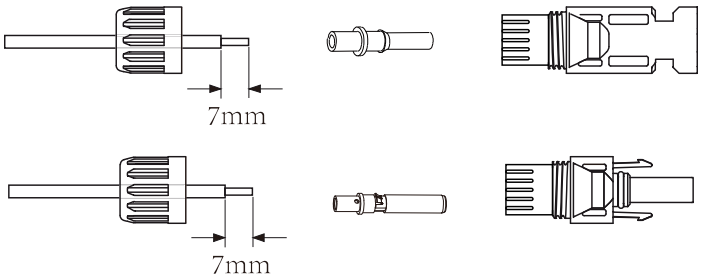

2. Crimp metal terminals with crimping pliers.

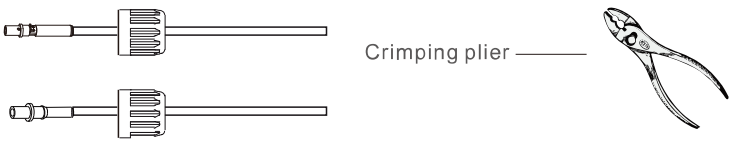

3. Insert the contact pin into the connector housing until it locks into place. Then screw the cap nut onto the connector housing. Torque to 2.5-3 N.m.

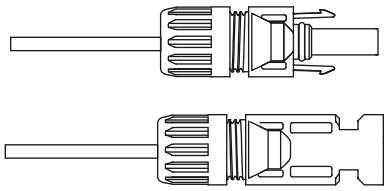

4. Finally, insert the DC connector into the positive and negative input of the inverter.

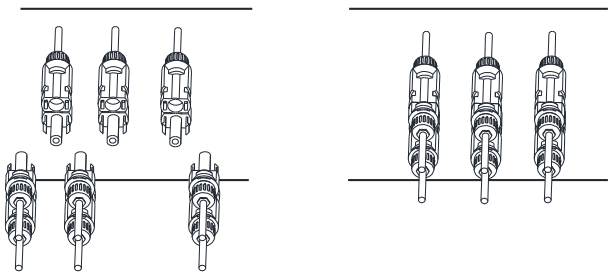

NOTE:

When sunlight strikes the solar panel, it generates voltage. In a series configuration, high panel-generated voltage can pose a danger. Therefore, before connecting the DC input line, shield the solar panel from direct sunlight using opaque material and ensure the DC switch is off. This prevents high voltage from reaching the inverter, reducing the risk during installation or maintenance. Do not switch off the DC isolator during periods of high voltage or current. Technicians should wait until nightfall to ensure safety.

WARNING

Use the DC power connector provided with the inverter accessories. Avoid interconnecting connectors from different manufacturers. The maximum DC input current should not exceed 20A. Exceeding this limit may damage the inverter and will void the Sunsynk warranty.

Connecting the CT Coil

The CT coil is one of the most important parts of the Sunsynk inverter. This device reduces the power of the inverter to prevent feeding power to the grid. This feature is also known as “Zero Export”.

1. Fit the coil (sensor) around the live cable on the main fuse feeding the building and run the cable back to the inverter. If using an external meter, you can extend the cable for more than 10 metres. Plese consult the meter manual on distance.
2. Connect the other end of the CT coil to the inverter terminals.

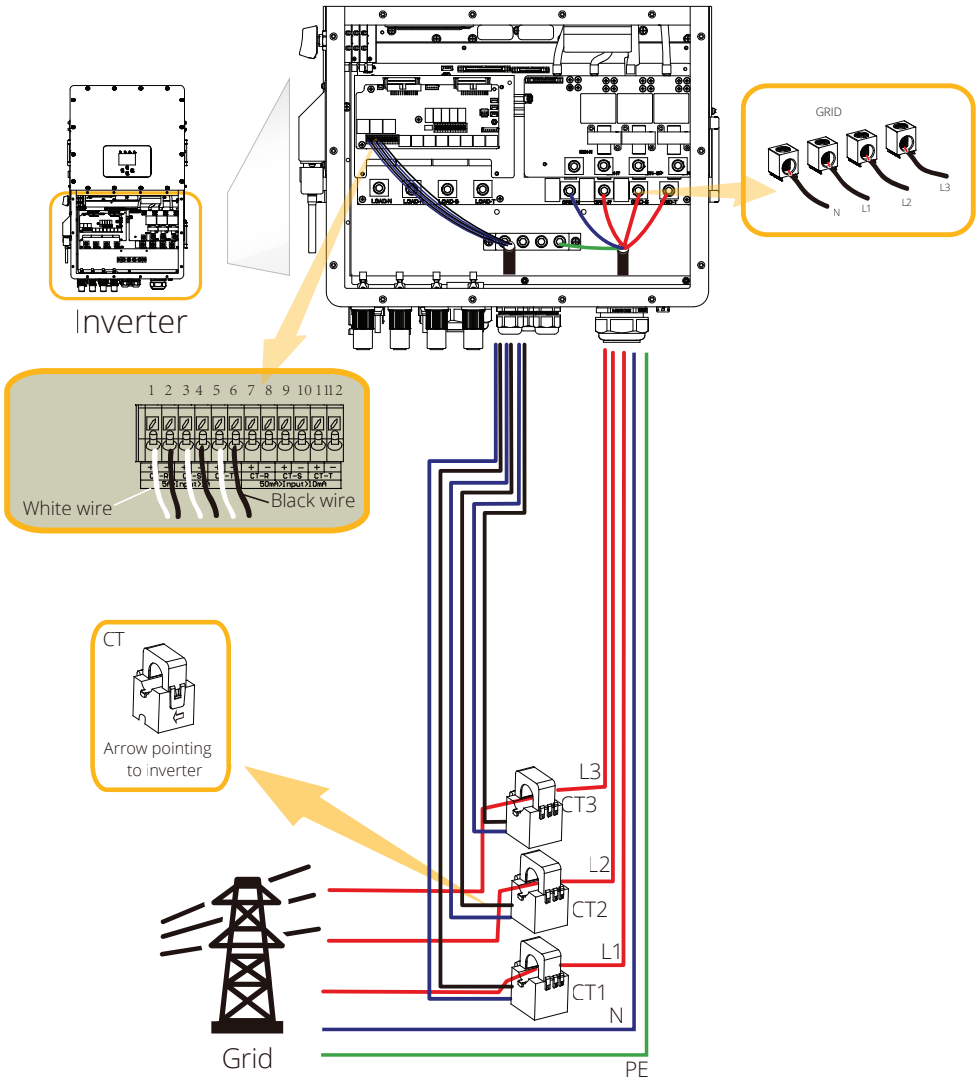

NOTE:

When the reading of the load power on the LCD is not correct, please reverse the CT arrow.

When the inverter is in the off-grid state, the N line needs to be connected to the earth.

For systems utilizing three or more inverters drawing over 300A from the grid, it's advisable to employ larger CTs (Current Transformers). It's recommended utilizing a 1200A/5A CT when the grid current exceeds 300A.

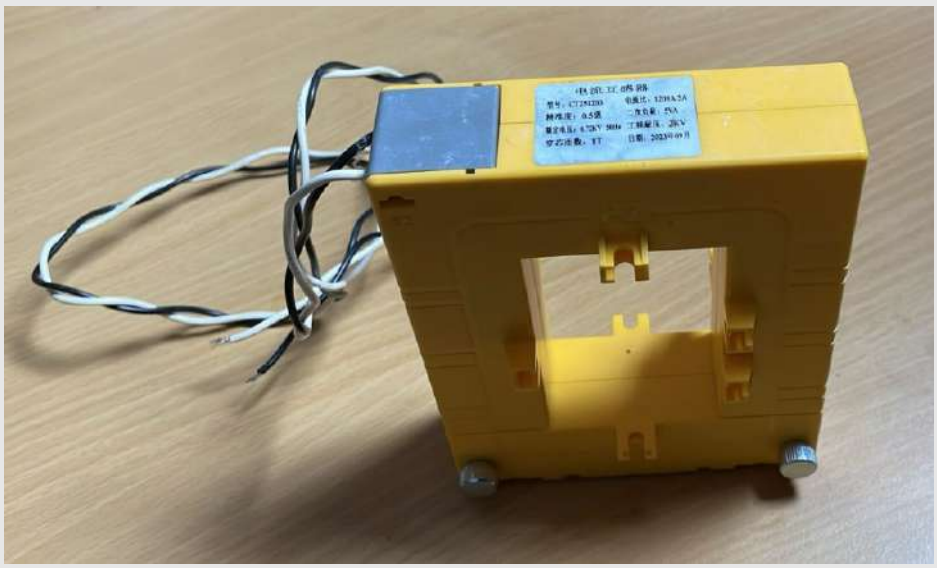

Meter Connection

CHINT Meter

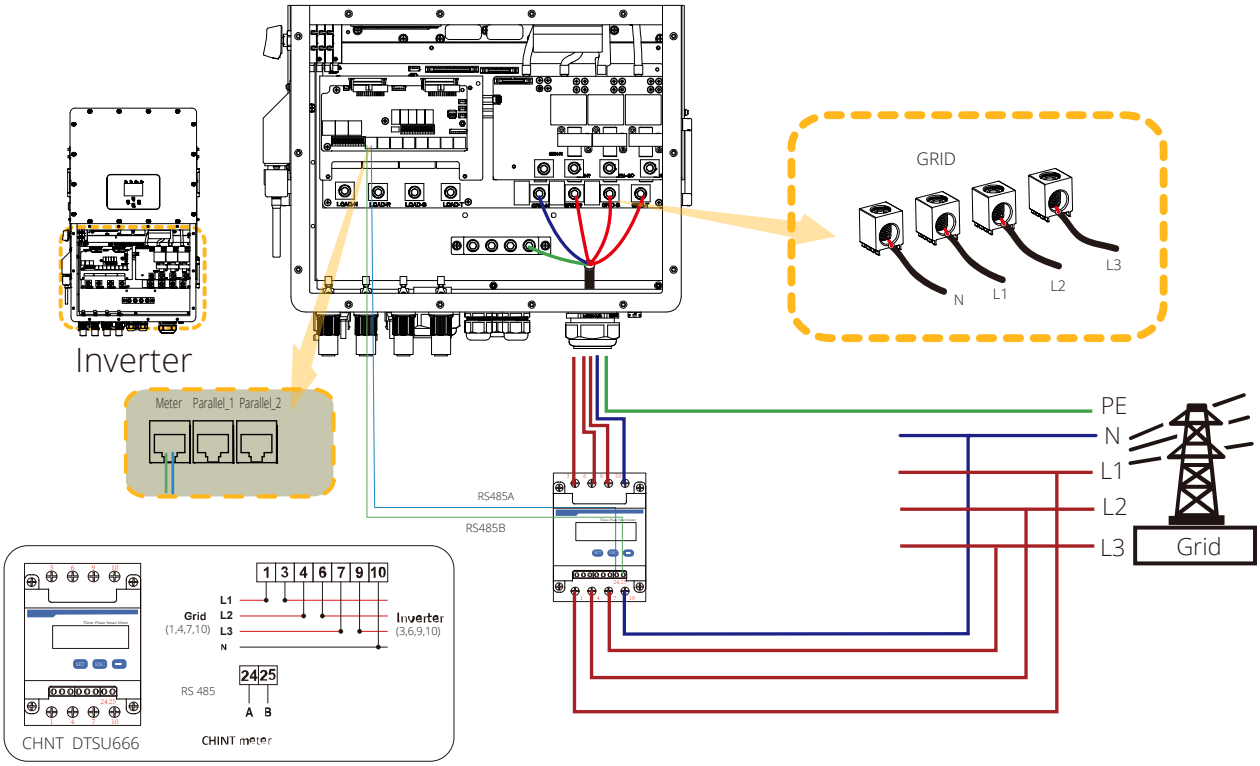

SUN SYNK

Eastron Meter

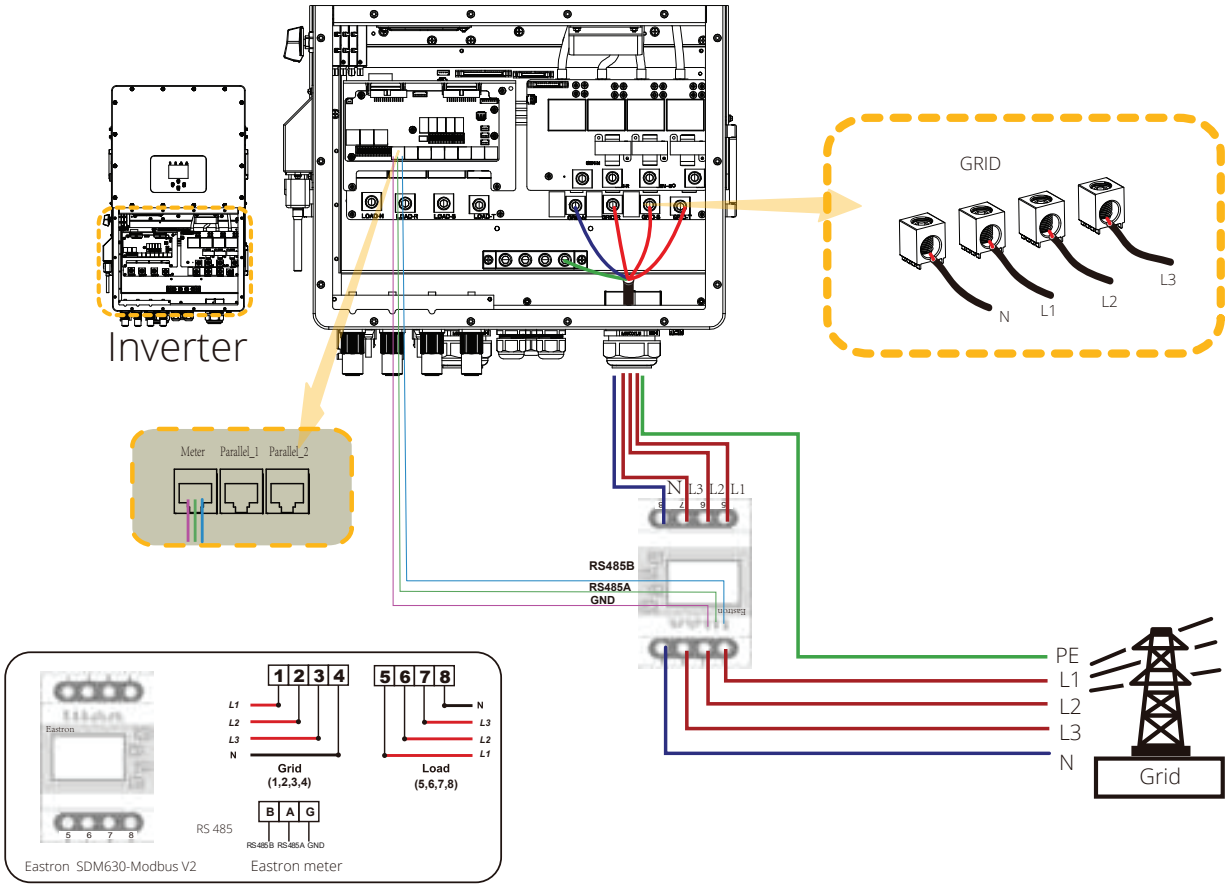

CHINT Meter with CT Coil

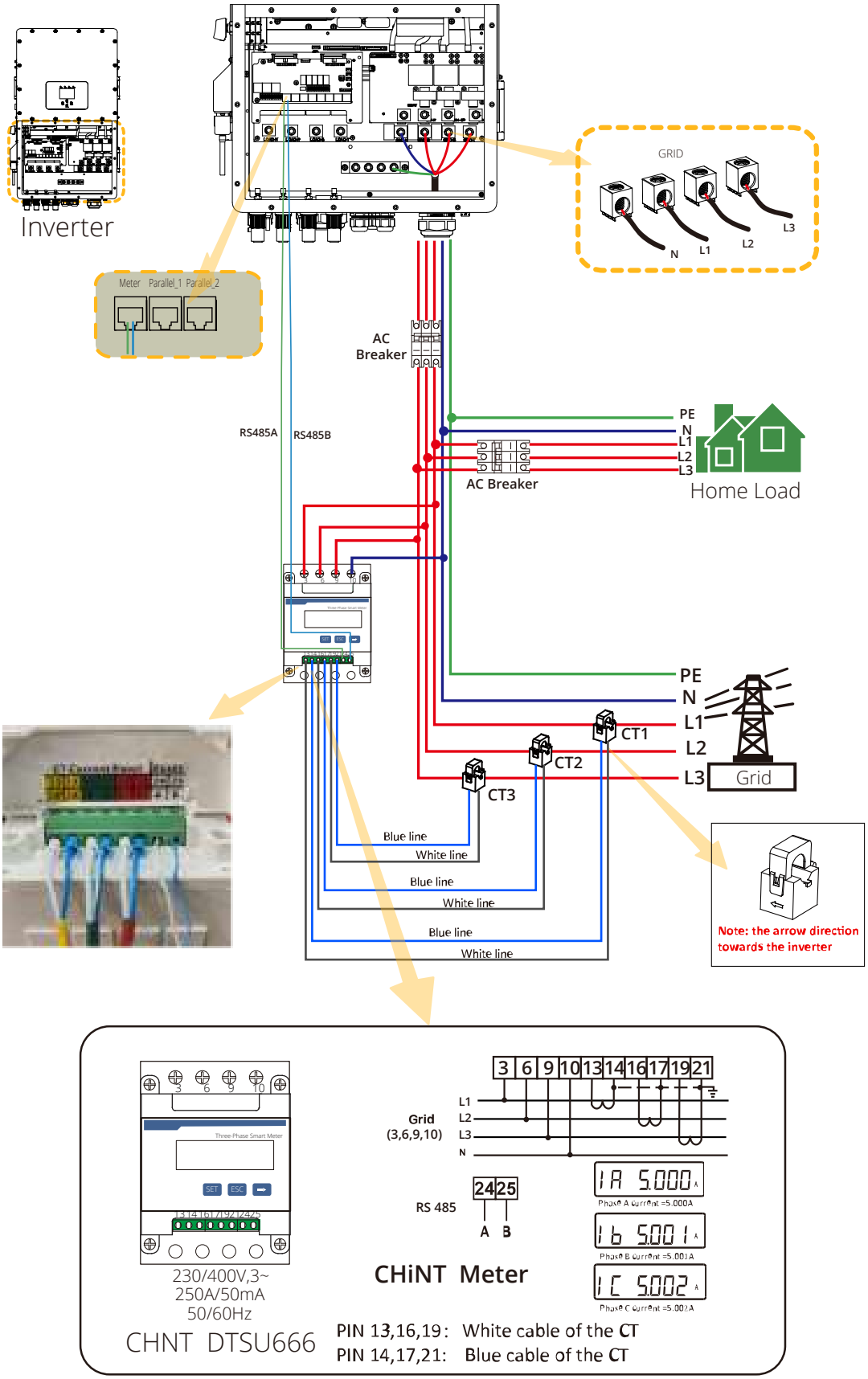

SUN SYNK

Eastron Meter with CT Coil

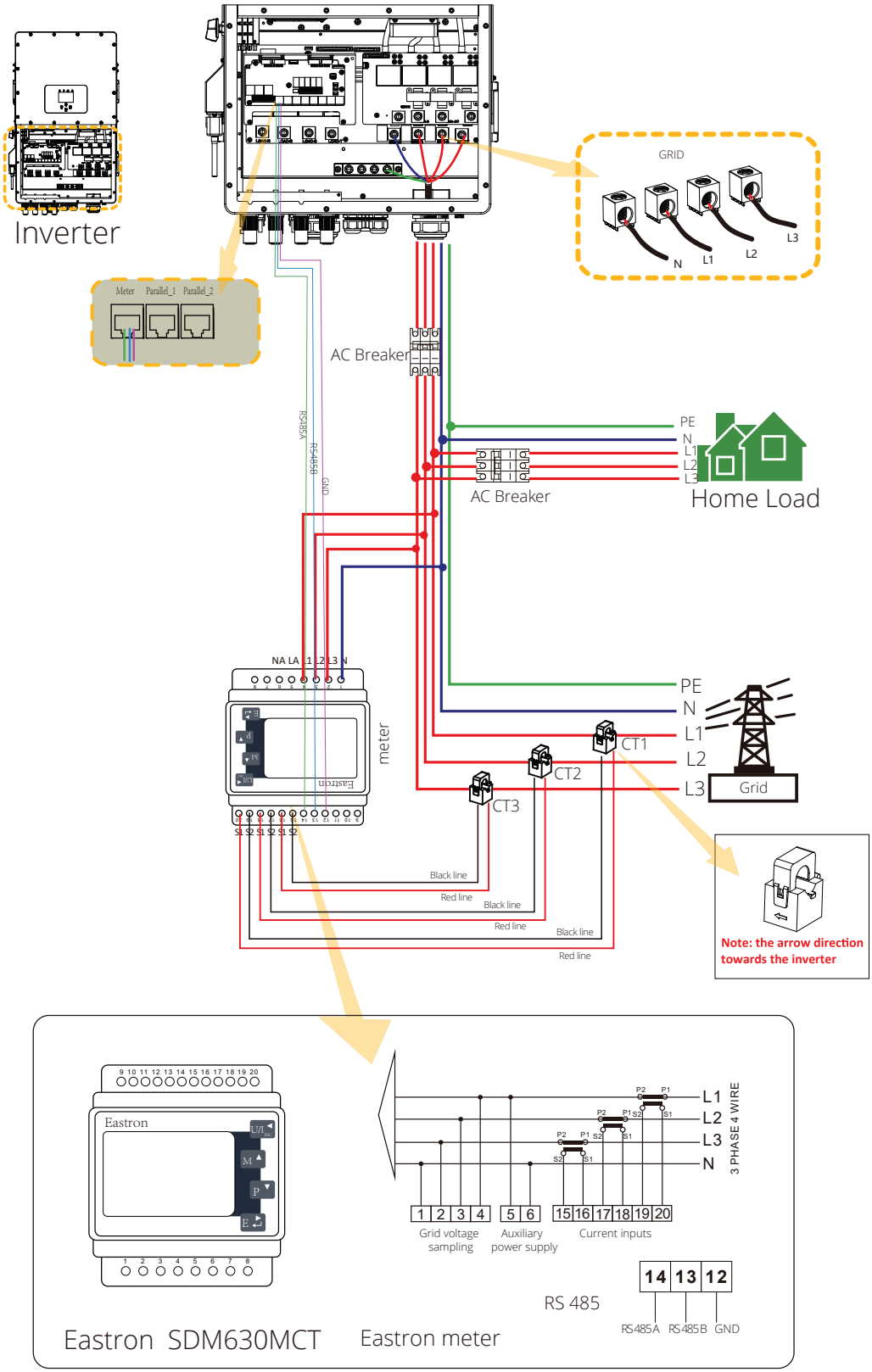

NOTE:

When the inverter is in the off-grid state, the N line needs to be connected to the earth.

In the final installation, a breaker certified according to IEC 60947-1 and IEC 60947-2 shall be installed with the equipment.

Earth Connection (MANDATORY)

Ground cable shall be connected to ground plate on grid side this prevents electric shock if the original protective conductor fails.

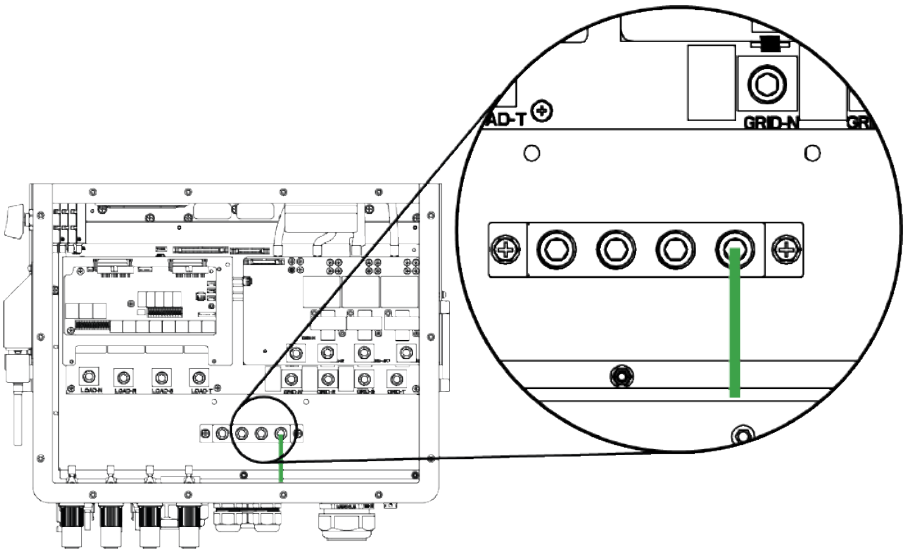

Earth Connection (Copper wires) (bypass)

Model	Wire Size	Cable (mm²)	Torque Value (max)
29.9/30/35/40/50kW	0 AWG	50	28.2Nm

Earth Connection (Copper wires)

Model	Wire Size	Cable (mm²)	Torque Value (max)
29.9/30/35kW	6 AWG	10	12.4Nm
40kW	4 AWG	16	12.4Nm
50kW	4 AWG	16	16.9Nm

The conductor should be made of the same metal as the phase conductors.

NOTE:

Only for South Africa – Using a permanent PE/N bond on LOAD OUTPUT is recommended, and the supply power to the grid port needs to be taken from the mains before the main RCD to prevent RCD from tripping.

The bond we recommend being done in the external box clearly marked “permanent PE/N bond“, and this has been advised by local authorities.

Wiring System for Inverter

This diagram is an example for an application that neutral connects with the PE in a distribution box.

For countries such as Australia, New Zealand, South Africa, etc., please follow local wiring regulations!

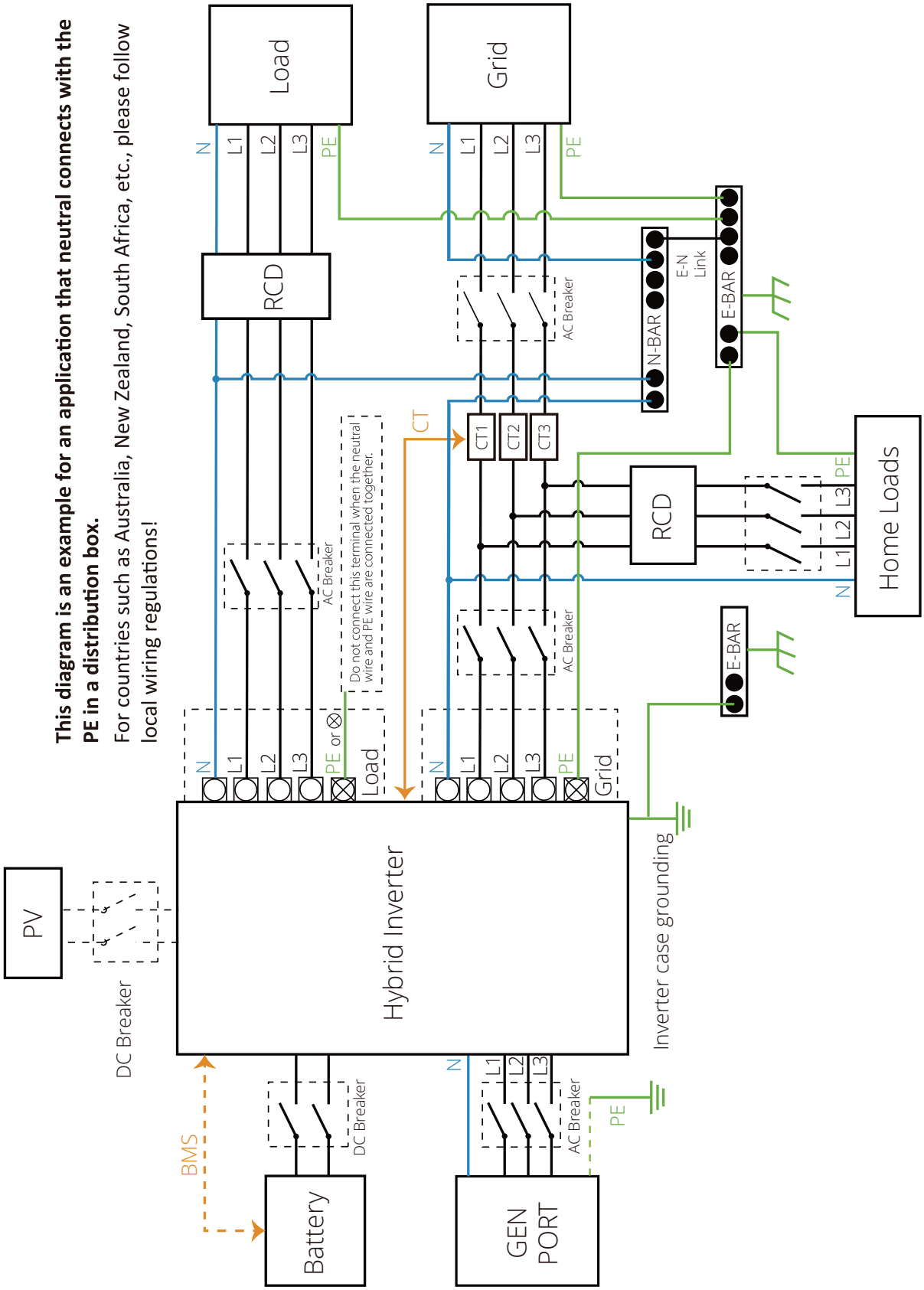

SUN SYNK®

Wiring Diagram

This diagram is an example for an application in which neutral is separated from the PE in the distribution box.

For countries such as China, Germany,the Czech Republic, Italy, etc., please follow local wiring regulations!

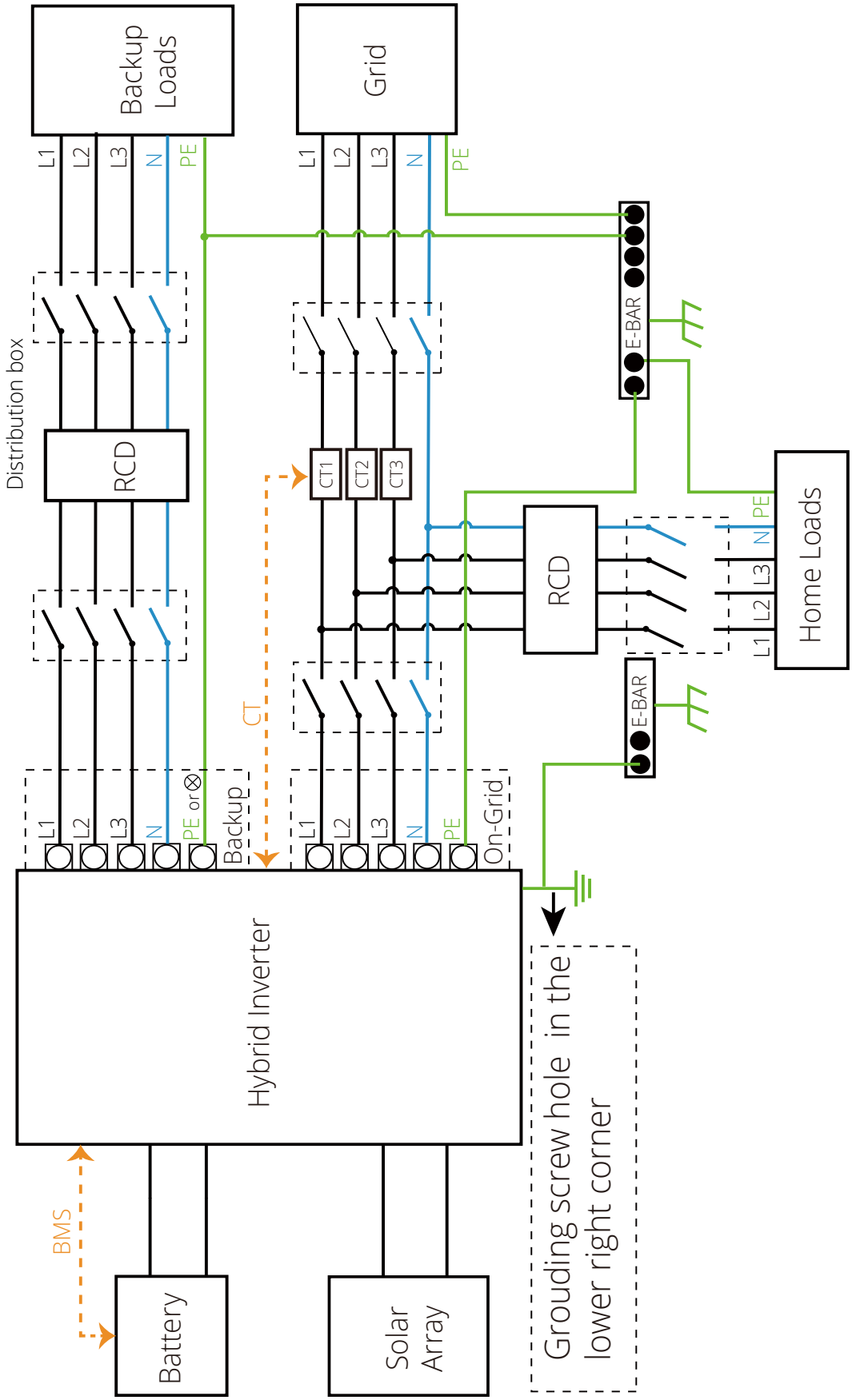

SUN SYNK®

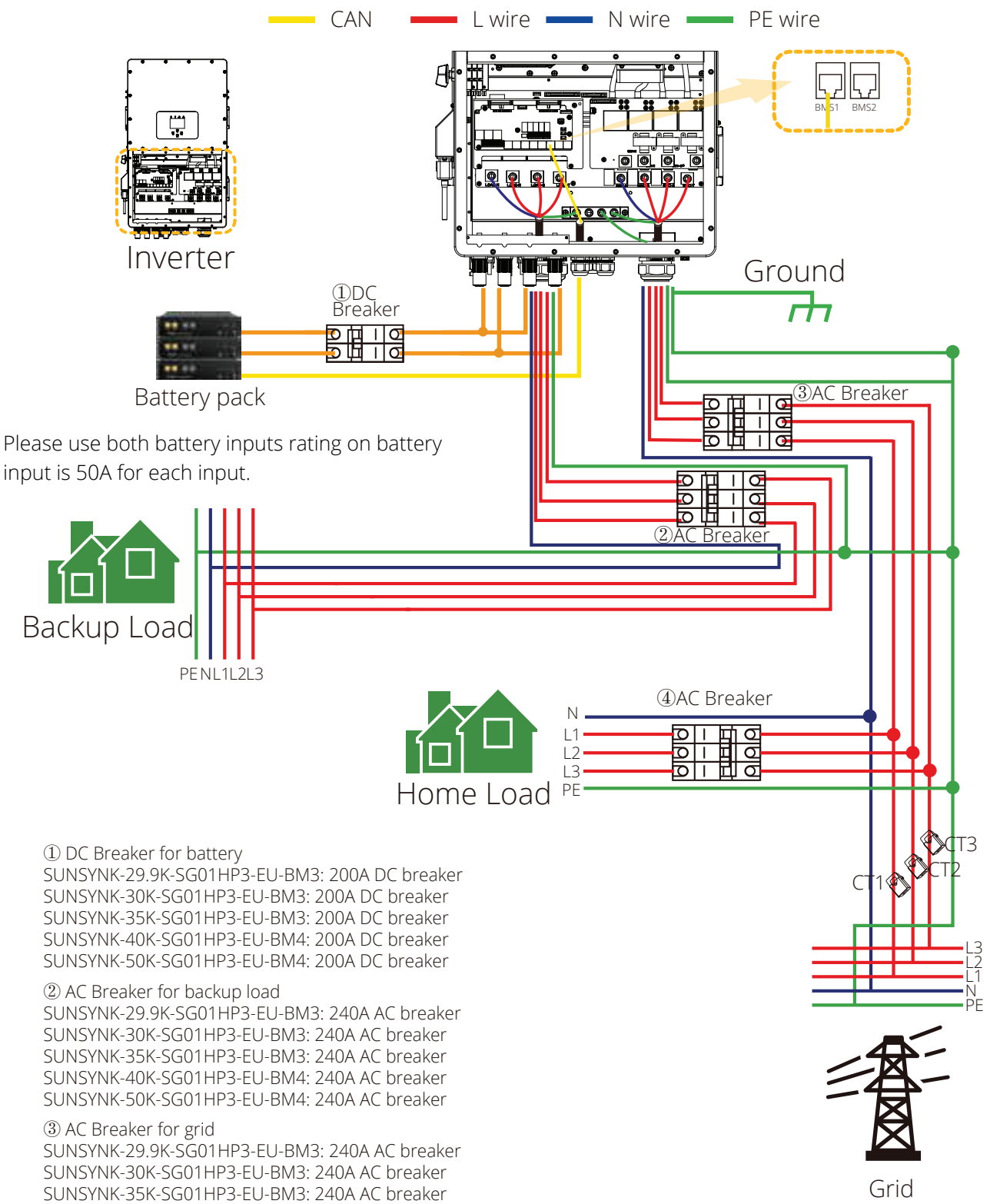

Please use both battery inputs rating on battery input is 50A for each input.

① DC Breaker for battery
SUNSYNK-29.9K-SG01HP3-EU-BM3: 200A DC breaker
SUNSYNK-30K-SG01HP3-EU-BM3: 200A DC breaker
SUNSYNK-35K-SG01HP3-EU-BM3: 200A DC breaker
SUNSYNK-40K-SG01HP3-EU-BM4: 200A DC breaker
SUNSYNK-50K-SG01HP3-EU-BM4: 200A DC breaker

② AC Breaker for backup load
SUNSYNK-29.9K-SG01HP3-EU-BM3: 240A AC breaker
SUNSYNK-30K-SG01HP3-EU-BM3: 240A AC breaker
SUNSYNK-35K-SG01HP3-EU-BM3: 240A AC breaker
SUNSYNK-40K-SG01HP3-EU-BM4: 240A AC breaker
SUNSYNK-50K-SG01HP3-EU-BM4: 240A AC breaker

③ AC Breaker for grid
SUNSYNK-29.9K-SG01HP3-EU-BM3: 240A AC breaker
SUNSYNK-30K-SG01HP3-EU-BM3: 240A AC breaker
SUNSYNK-35K-SG01HP3-EU-BM3: 240A AC breaker
SUNSYNK-40K-SG01HP3-EU-BM4: 240A AC breaker
SUNSYNK-50K-SG01HP3-EU-BM4: 240A AC breaker

④AC Breaker for home load
Depends on household loads

Typical Application of Diesel Generator

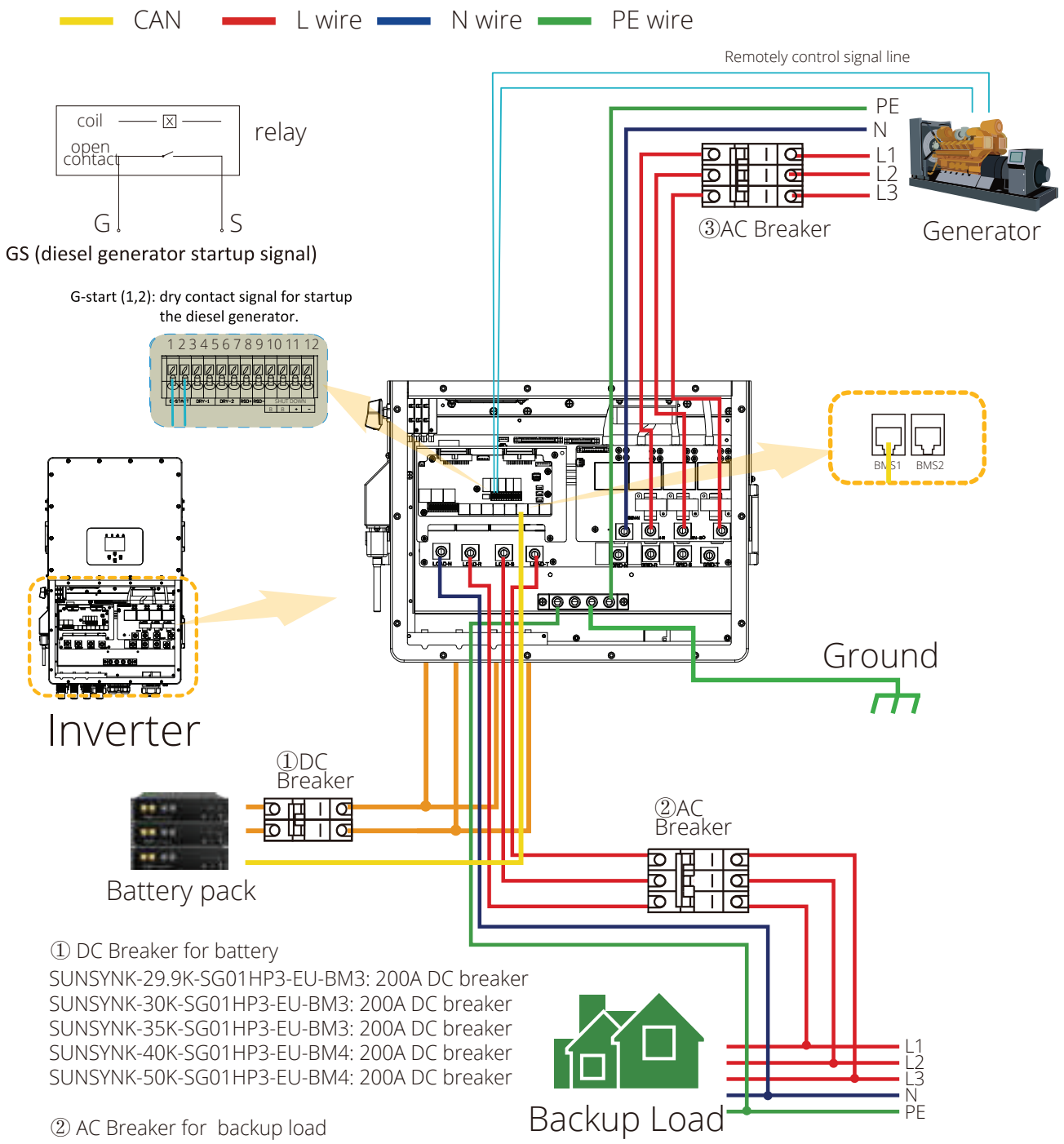

① DC Breaker for battery

SUNSYNK-29.9K-SG01HP3-EU-BM3: 200A DC breaker
SUNSYNK-30K-SG01HP3-EU-BM3: 200A DC breaker
SUNSYNK-35K-SG01HP3-EU-BM3: 200A DC breaker
SUNSYNK-40K-SG01HP3-EU-BM4: 200A DC breaker
SUNSYNK-50K-SG01HP3-EU-BM4: 200A DC breaker

② AC Breaker for backup load

SUNSYNK-29.9K-SG01HP3-EU-BM3: 240A AC breaker
SUNSYNK-30K-SG01HP3-EU-BM3: 240A AC breaker
SUNSYNK-35K-SG01HP3-EU-BM3: 240A AC breaker
SUNSYNK-40K-SG01HP3-EU-BM4: 240A AC breaker
SUNSYNK-50K-SG01HP3-EU-BM4: 240A AC breaker

③ AC Breaker for Generator port

SUNSYNK-29.9K-SG01HP3-EU-BM3: 240A AC breaker
SUNSYNK-30K-SG01HP3-EU-BM3: 240A AC breaker
SUNSYNK-35K-SG01HP3-EU-BM3: 240A AC breaker
SUNSYNK-40K-SG01HP3-EU-BM4: 240A AC breaker
SUNSYNK-50K-SG01HP3-EU-BM4: 240A AC breaker

Three Phase Parallel Connection

Note: For the parallel system, the lead-acid battery is not supported. Please use Sunsynk approved lithium battery. All inverters connected in parallel must be the same model.

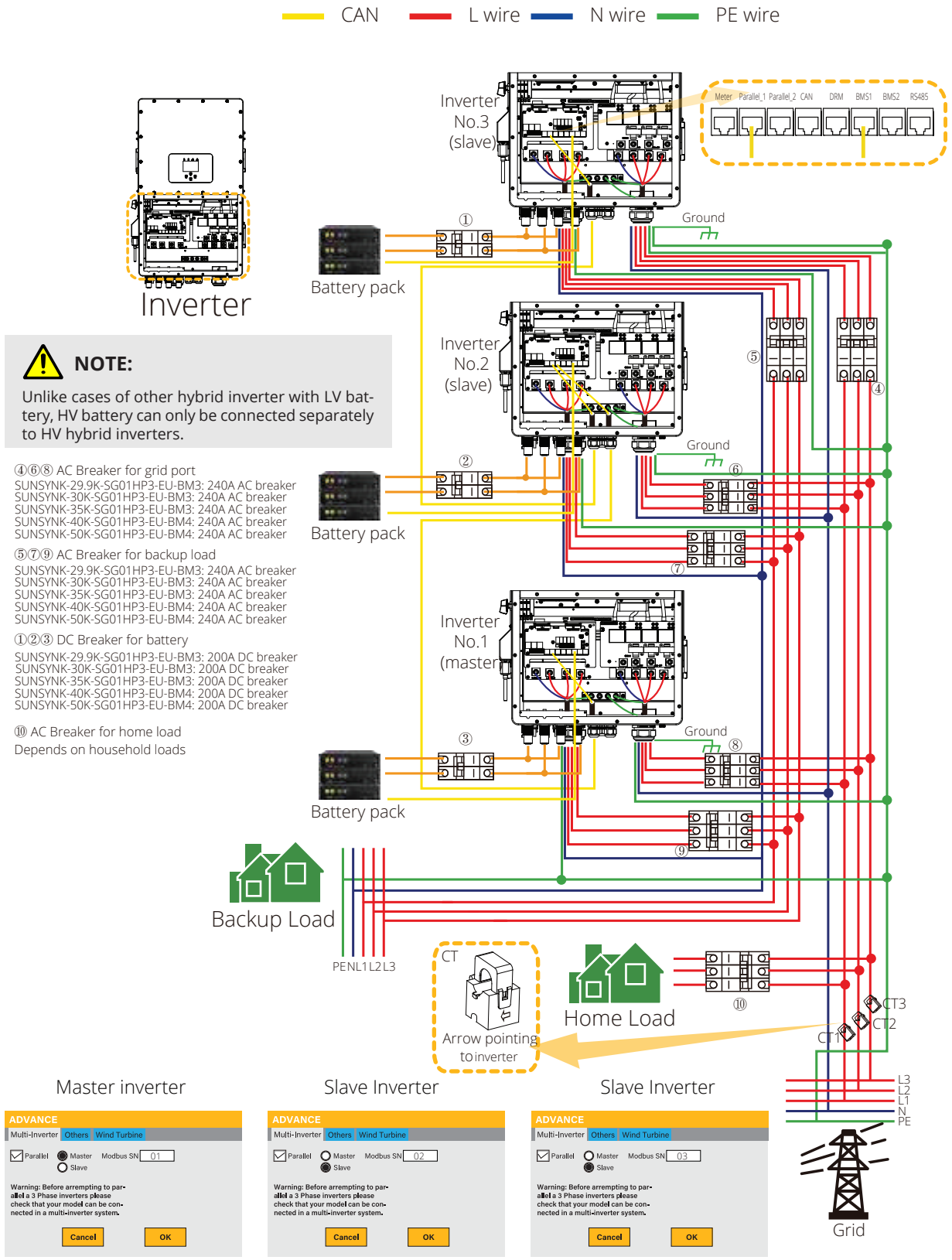

NOTE:

Unlike cases of other hybrid inverter with LV battery, HV battery can only be connected separately to HV hybrid inverters.

④⑥⑧ AC Breaker for grid port
SUNSYNK-29.9K-SG01HP3-EU-BM3: 240A AC breaker
SUNSYNK-30K-SG01HP3-EU-BM3: 240A AC breaker
SUNSYNK-35K-SG01HP3-EU-BM3: 240A AC breaker
SUNSYNK-40K-SG01HP3-EU-BM4: 240A AC breaker
SUNSYNK-50K-SG01HP3-EU-BM4: 240A AC breaker

⑤⑦⑨ AC Breaker for backup load
SUNSYNK-29.9K-SG01HP3-EU-BM3: 240A AC breaker
SUNSYNK-30K-SG01HP3-EU-BM3: 240A AC breaker
SUNSYNK-35K-SG01HP3-EU-BM3: 240A AC breaker
SUNSYNK-40K-SG01HP3-EU-BM4: 240A AC breaker
SUNSYNK-50K-SG01HP3-EU-BM4: 240A AC breaker

①②③ DC Breaker for battery
SUNSYNK-29.9K-SG01HP3-EU-BM3: 200A DC breaker
SUNSYNK-30K-SG01HP3-EU-BM3: 200A DC breaker
SUNSYNK-35K-SG01HP3-EU-BM3: 200A DC breaker
SUNSYNK-40K-SG01HP3-EU-BM4: 200A DC breaker
SUNSYNK-50K-SG01HP3-EU-BM4: 200A DC breaker

⑩ AC Breaker for home load
Depends on household loads

NOTE:

Please set dip switches on for master and when more than 2 inverters all dip switches on.

OPERATION

Switching ON/OFF

Once the inverter has been correctly installed and the batteries have been connected, press the ON/OFF button (located on the left side of the case) to activate the system. When the system is connected without a battery but connected with either PV or grid and the ON/OFF button is switched off, the LCD will still illuminate (display will show off). In this condition, when switching on the ON/OFF button and selecting 'No Battery', the system can still work.

Display

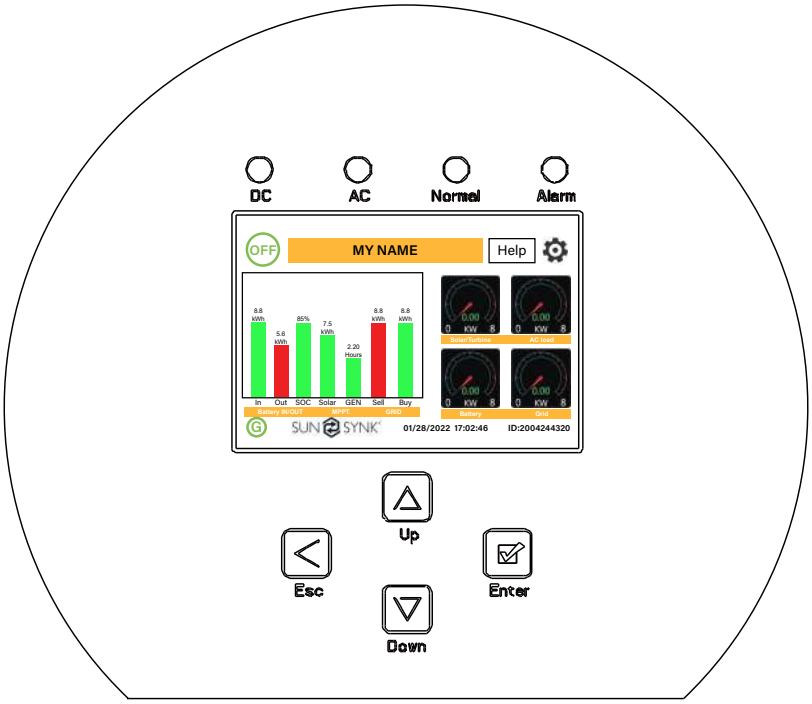

LED Indicators

LED indicator		Meaning
DC	Green LED solid light	PV connection normal
AC	Green LED solid light	Grid connection normal
Normal	Green LED solid light	Inverter functioning normally
Alarm	Red LED solid light	Fault

Function Buttons

Function Key	Description
Esc	To exit the previous mode
Up	Increase the value of a setting
Down	Decrease the value of a setting
Enter	Confirm setting change (If not pressed each time the setting will not be saved)

LCD Operation Flow Chart

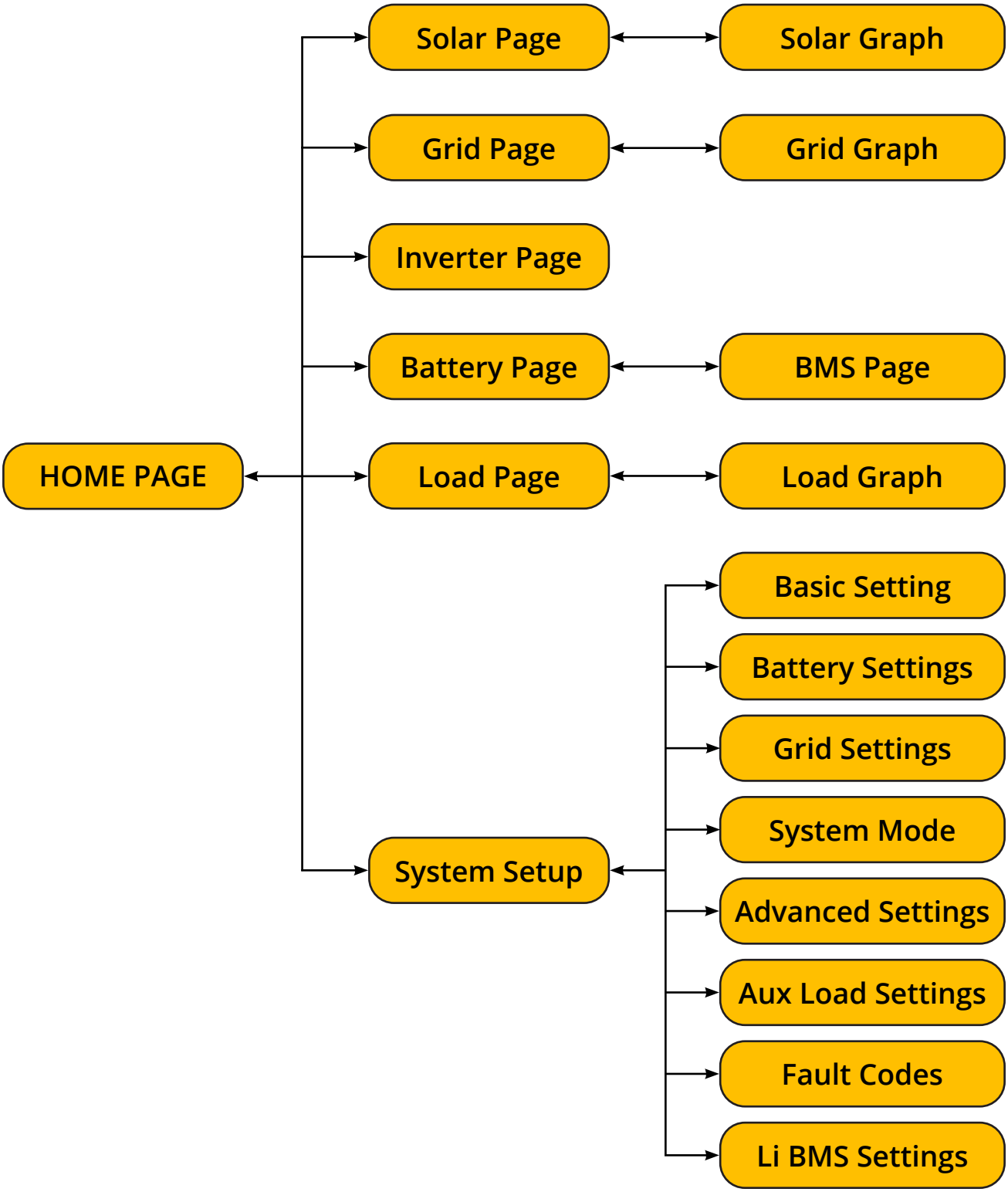

Home page

Press the Esc button any page to access the home page:

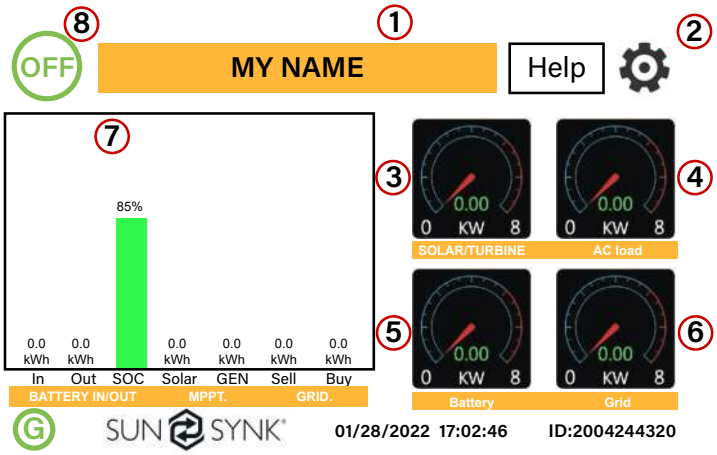

1. Customer name
2. Access the settings menu page
3. Access solar page
4. Access load page
5. Access battery page
6. Access grid page
7. Access system flow page
8. Access fault code displays.

The icon (8) indicates that the system is in Normal operation. If it turns into "comm./F01~F64", the inverter has communication errors or other errors, and the error message will display under this icon (F01-F64 errors, detail error info can be viewed in the System Alarms menu).

What this page displays:

- Total daily power into the battery (kWh).
- Total daily power out of the battery (kWh).
- SOC (State of charge of the battery) (%).
- Total daily solar power produced in (kWh).
- Total hourly usage of the generator (Time).
- Total daily power sold to the grid (kWh).
- Total daily power bought from the grid (kWh).
- Real-time solar power in (kW).
- Real-time load power in (kW).
- Real-time battery charge power in (kW).
- Real-time grid power in (kW).
- Serial number.
- Time date.
- Access the status page.
- Access the fault code displays.

Status Page

This page shows the status of Solar Power, Grid Power, Inverter Power, UPS LD Power, Battery and Generator Power. To access the Status page, click on the BATTERY or AC LOAD dial on the Home page.

Solar	Grid	INV	UPS LD	Batt
0W 0V / 0.0A M1: 0W 0V / 0.0A M2: 0W	0W 0.0Hz L1: 0V L2: 0V L3: 0V HM1: 0A HM2: 0A HM3: 0A	0W 0.0Hz L1: 0V L2: 0V L3: 0V L1: 0A L2: 0A L3: 0A	0W L1: 0V L2: 0V L3: 0V L1: 0W L2: 0W L3: 0W	0W 0.0V / 0% 0.00A -100.0 C
TEMP AC -100.0	LD1: 0W LD2: 0W LD1: 0W	L1: 0W L2: 0W L1: 0W	**Gen** 0.0Hz 0W L1: 0V L2: 0V L3: 0V	L1: 0W L2: 0W L3: 0W

What this page displays:

- Total solar power produced.
- MPPT 1 power/voltage/current.
- MPPT 2 power/voltage/current.
- MPPT 3 power/voltage/current.
- MPPT 4 power/voltage/current
- Grid power.
- Grid frequency.
- Grid voltage.
- Grid current.
- Inverter power.
- Inverter frequency.
- Inverter voltage.
- Inverter current.
- Inverter heat-sink temperature.
- UPS LD power/voltage.
- Battery power charge/discharge.
- Battery SOC.
- Battery current.
- Battery temperature.
- Gen frequency.
- Gen power/voltage.

Solar Column: Shows total PV (Solar) power, voltage and current for each of the four MPPT.

Grid Column: Shows grid total power, frequency, voltage, and current. When selling power to the grid, the power is negative. When consuming from the grid, the power is positive. If the sign of the grid and HM (home) powers are not the same when the PV is disconnected and the inverter is only taking energy from the grid and using the CT connected to Limit-2, then please reverse the polarity of the CT coil.
Important: See Section 'Connecting the CT coil'.

Inverter Column: Showing inverter total power, frequency, L1, L2 and L3 voltage, current, and power.

Load Column: Showing total load power, load voltage, and power on L1, L2 and L3.

Battery Column: Shows total power from the battery, battery SOC, battery voltage, battery current (negative means charge, positive means discharge) battery temperature (shows zero if the battery temperature sensor is not connected). DC transformer temperature and AC heatsink temperature (When the temperature reaches 90°C, it will display in red, and the performance of the inverter will start deteriorating when it reaches 110°C. Subsequently, the inverter will shut down to allow it to cool and reduce its temperature.

System Flow Page

Access by clicking on the bar chart on the Home Page.

To better understand the functioning of your system, take a look at the figure at right:

1. The PV modules charge the batteries.
2. When the batteries reach a specific level (programmable), the battery power is fed into the inverter.
3. The inverter can then supply power to the grid (export or no export), load, and auxiliary or smart load.
4. CT coil controls the export power.

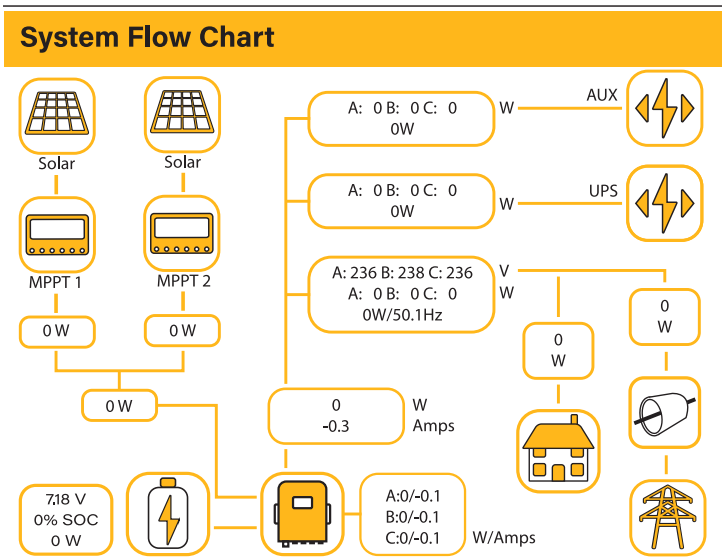

What this page displays:

- The system flow.
- MPPTs power.
- Battery status.
- Power distribution to load or grid.

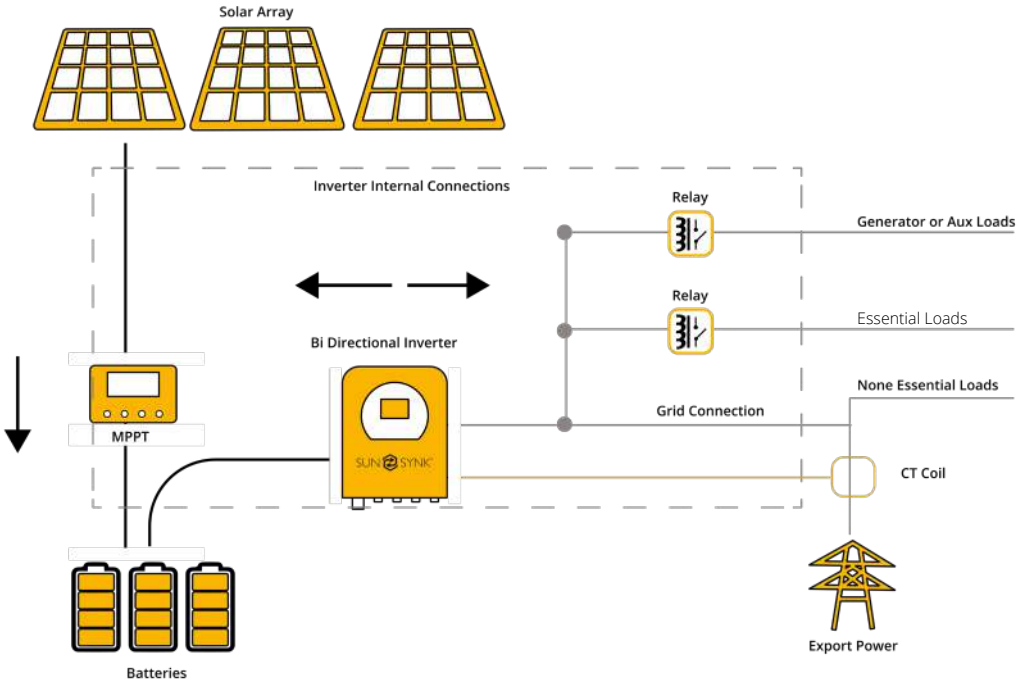

Setup Page

To access Settings, click on the gear icon on the right top of the navigation menu.

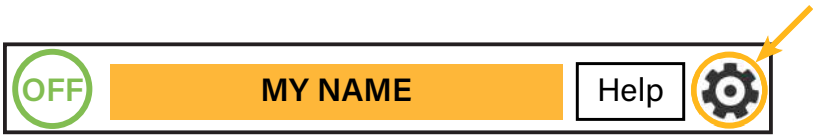

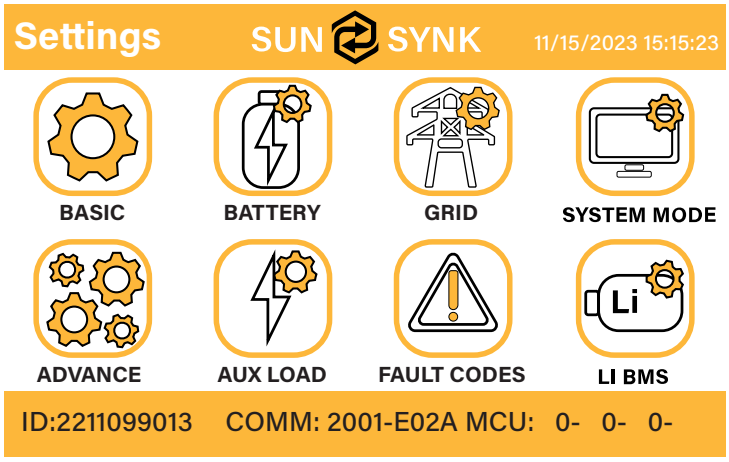

What this page displays:

- Serial number.
- Software version.
- Time, Date, and MCU.

What you can do from this page:

- Access the Basic Setup Page (press the BASIC icon).
- Access the Battery Setup Page (press the BATTERY icon).
- Access the Grid Setup Page (press the GRID icon).
- Access the real-time programmable timer/system mode (press the SYSTEM MODE icon).
- Access the advanced settings such as Paralleling and Wind Turbine (press the ADVANCE icon).
- Access the auxiliary load/smart load settings (press the AUX LOAD icon)
- Access the fault code register (press the FAULT CODES icon).
- Set up Li BMS (press the LI BMS icon).

Basic Setup

Set Time (Clock)

To set time, click on the BASIC icon and then on 'Time'

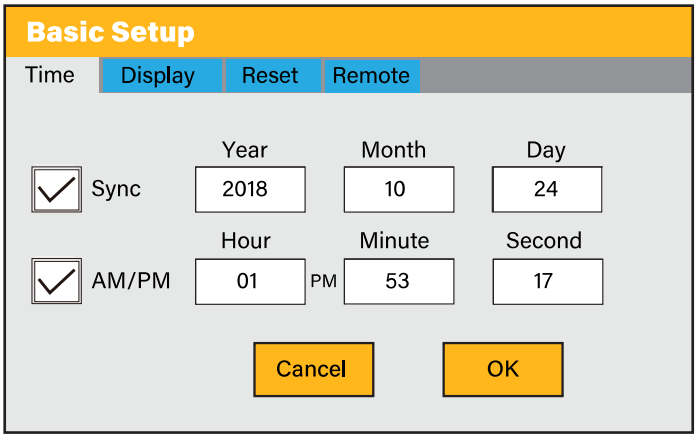

What this page displays:

- Time.
- Date.
- AM/PM.

What you can do from this page:

- Adjust / set time.
- Adjust / set date.
- Adjust / set AM/PM.

How to set up:

- Touch the screen on the box you wish to change.
- Change the number (increase/decrease) using the UP and DOWN buttons.
- Press OK to set the changes.

Set Company Name / Beeper / Auto dim

To set company name click on the BASIC icon and then on 'Display'.

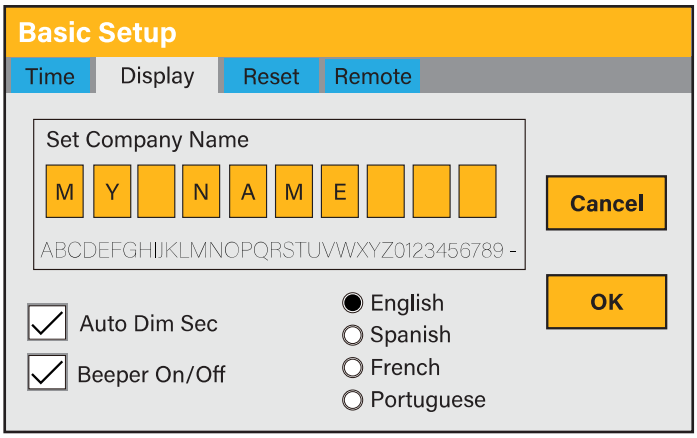

What this page displays:

- Beeper status (ON/OFF)
- Installers names.

What you can do from this page:

- Set up your company name.
- Switch the beeper ON or OFF.
- Set the LCD backlight to auto dim.

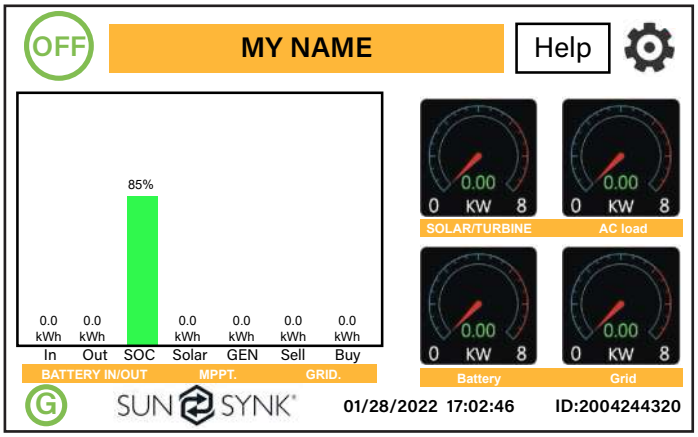

How to change the name:

Change the letters in each box by moving the arrows up and down and then select OK. This will change the name on the home screen.

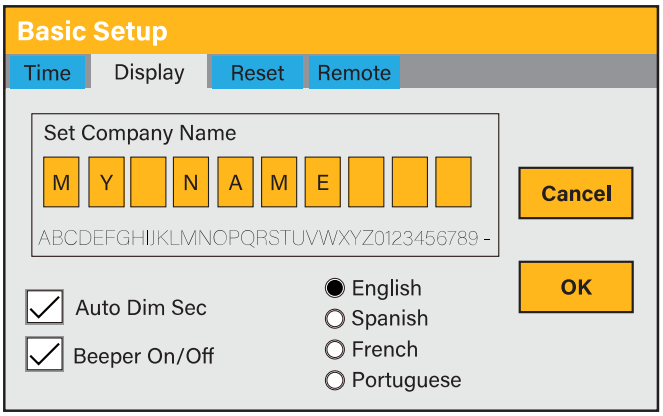

How to set the auto dim:

Set a number in the auto dim box to dim the LCD after a number of seconds.

How to turn the beep on or off:

Check or uncheck the beep box and the press OK to configure it as you prefer.

Factory Reset and Lock Code

To access the Settings, click on the gear icon on the right top of the menu.

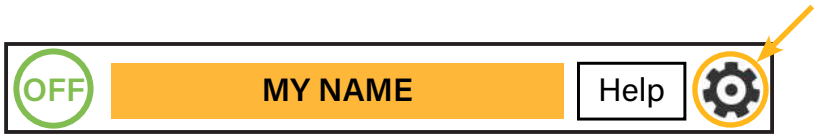

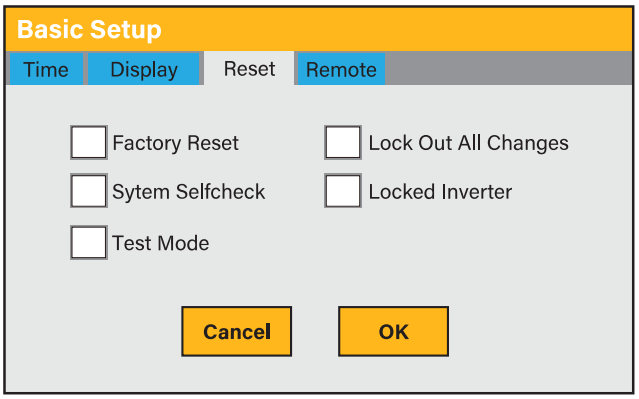

What this page displays:

- Reset status.
- Whether the 'lock code' is used or not.

What you can do from this page:

- Reset the inverter to the factory settings.
- System diagnostics.
- Change or set the 'lock code'.

Factory Reset: Reset all parameters of the inverter

Lock out all changes: Enable this menu to set parameters before the unit is locked and cannot be reset.

***Before performing a successful 'Factory Reset' and locking the systems, the user must enter a password to allow the setting to take place. The password for 'Factory Reset' is 9999 and for lockout is 7777.**

System self-check: Allows the user to conduct a system diagnosis. After ticking this item, it needs input the password. The default password is 1234.

Locked Inverter: This function is used to lock the inverter completely so no access can be gained. It will ask for a 5-digit code that only the Sunsynk Technical staff can assist with.

Test mode (only for engineers): For engineers to conduct tests.

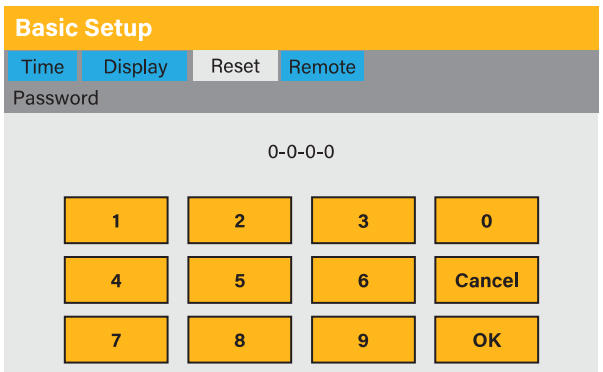

Inverter Remote Control

To control the inverter remotely, tick the box that allows it.

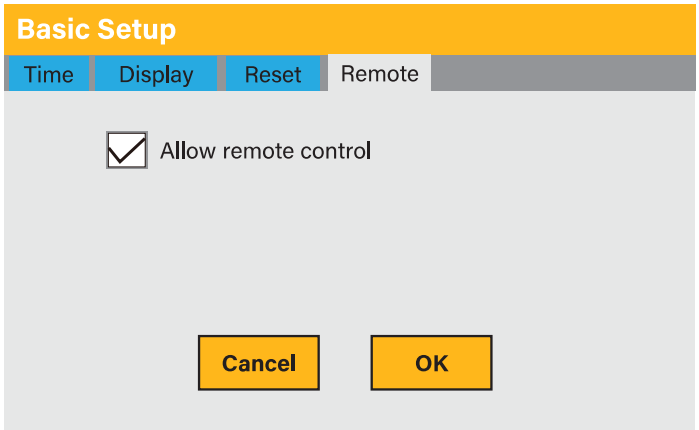

What this page displays:

- Remote control option.

What you can do from this page:

- Allows remote control of the inverter.

Battery Setup Page

To configure battery settings, click on the BATTERY icon and then on 'Batt type'.

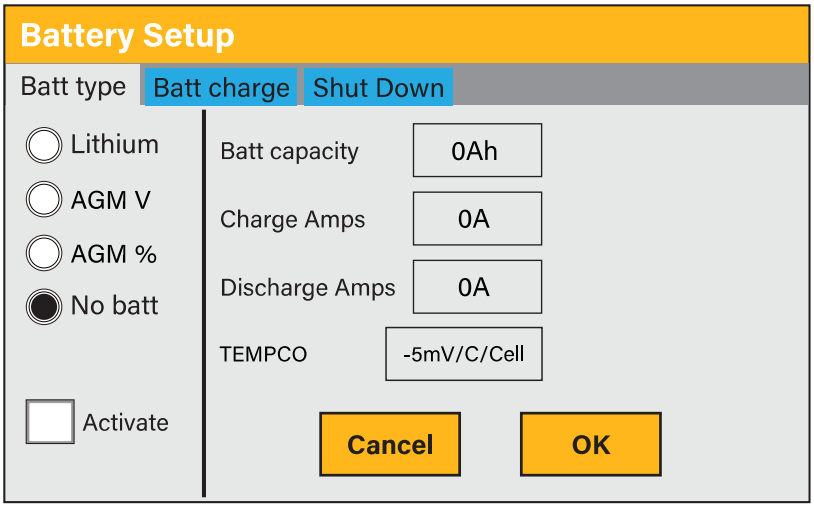

What this page displays:

- **Lithium:** This is BMS protocol. Please reference the document (Approved Battery).
- **AGM V:** Use battery voltage for all settings (V).
- **AGM %:** Use battery SOC for all settings (%).
- **No batt:** Tick this box if no battery is connected to the system. If it's ticked and the CT coil is connected, the inverter operates as a grid-tied inverter.
- **Battery capacity in (Ah):** For non-BMS-batteries the range allowed is 0-2000Ah, while for lithium-ion, the inverter will use the capacity value of the BMS.
- **Charge/Discharge Amps:** The Max battery charge/discharge current (0-50A for 29.9/30/35/40/50KW model).
- **Active battery:** This feature will help recover a battery that is 100% discharged by slowly changing from the solar array. Until the battery reaches a point where it can change normally.
- **TEMPCO settings:** The temperature coefficient is the error introduced by a change in temperature.

Generator & Battery Page

To configure battery charging settings, click on the BATTERY icon and then on 'Batt Charge'.

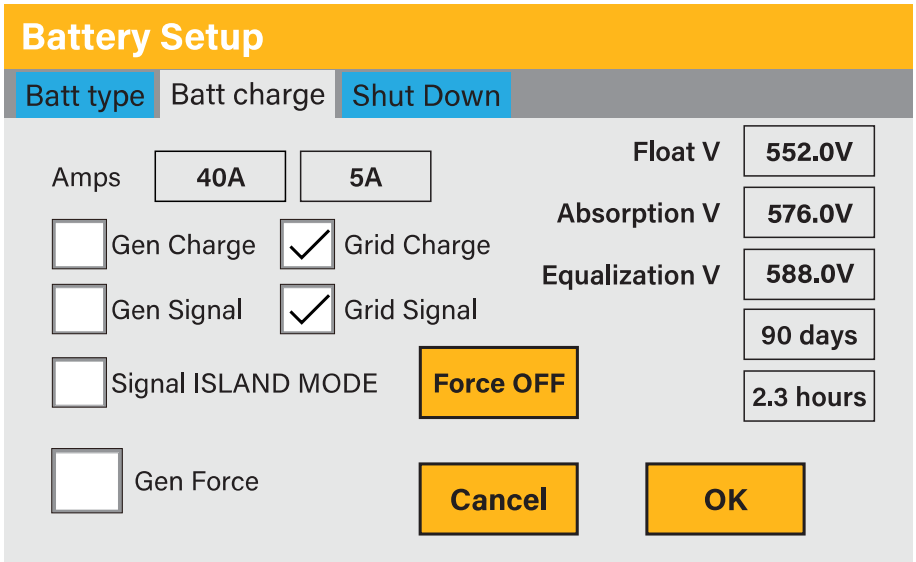

What this page displays:

- **Amps:** Charge rate of 40A from the attached generator in Amps.
- **Grid Amps:** Current that the grid charges the battery.
- **Grid Charge:** It indicates that the grid will charge the battery.
- **Grid Signal:** This indicates when the grid should no longer charge the battery.
- **Gen Charge:** Uses the GEN input of the system to charge the battery bank from an attached generator.
- **Gen Signal:** Normally open (NO) relay that closes when the Gen Start signal state is active.
- **Gen Force:** When the generator is connected, it is forced to start without meeting other conditions.
- **Force OFF:** This is to force the generator to switch off.
- **Signal ISLAND MODE:** When "signal island mode" is checked and the inverter connects the grid, the ATS port voltage will be 0. When "signal island mode" is checked and the inverter is disconnected from the grid, the ATS port voltage will output 230Vac. This feature and outside NO type relay can realize N and PE disconnection or bond.
- **Float V:** The voltage at which a battery is maintained after being fully charged.
- **Absorption V:** The level of charge that can be applied without overheating the battery.
- **Equalization V:** Equalizing charge/overcharge to remove sulphate crystals that build up on the plates over time on lead-acid batteries.

NOTE:

Do not alter these settings too often on the same battery, as it may damage the battery.

Recommended battery settings:

Battery Type	Absorption Stage	Float Stage	Voltage (every 30 days 3hr)
Lithium	Follow its BMS voltage parameters		

A generator can either be connected to the Grid side or to the Gen connection. When connected to the Grid Input, the inverter will consider the power coming from the generator as 'Grid Supply'. Users should ensure this power goes to the LOAD only and should not be exported to other outlets, as this will damage the generator.

If the generator is connected to the inverter and a generating signal exists, the inverter will switch 100% of the load to the generator and then slowly increase the charging currents to the batteries. Therefore, the generator must be able to supply both the charge current and the total load current.

The generator can be controlled via a relay with a set of dry-contacts to enable remote control. The current on the contacts is limited to approximately 1Amp 12V.

Below is a simple reference circuit of an auto-start system that can auto-start generators on a boat.

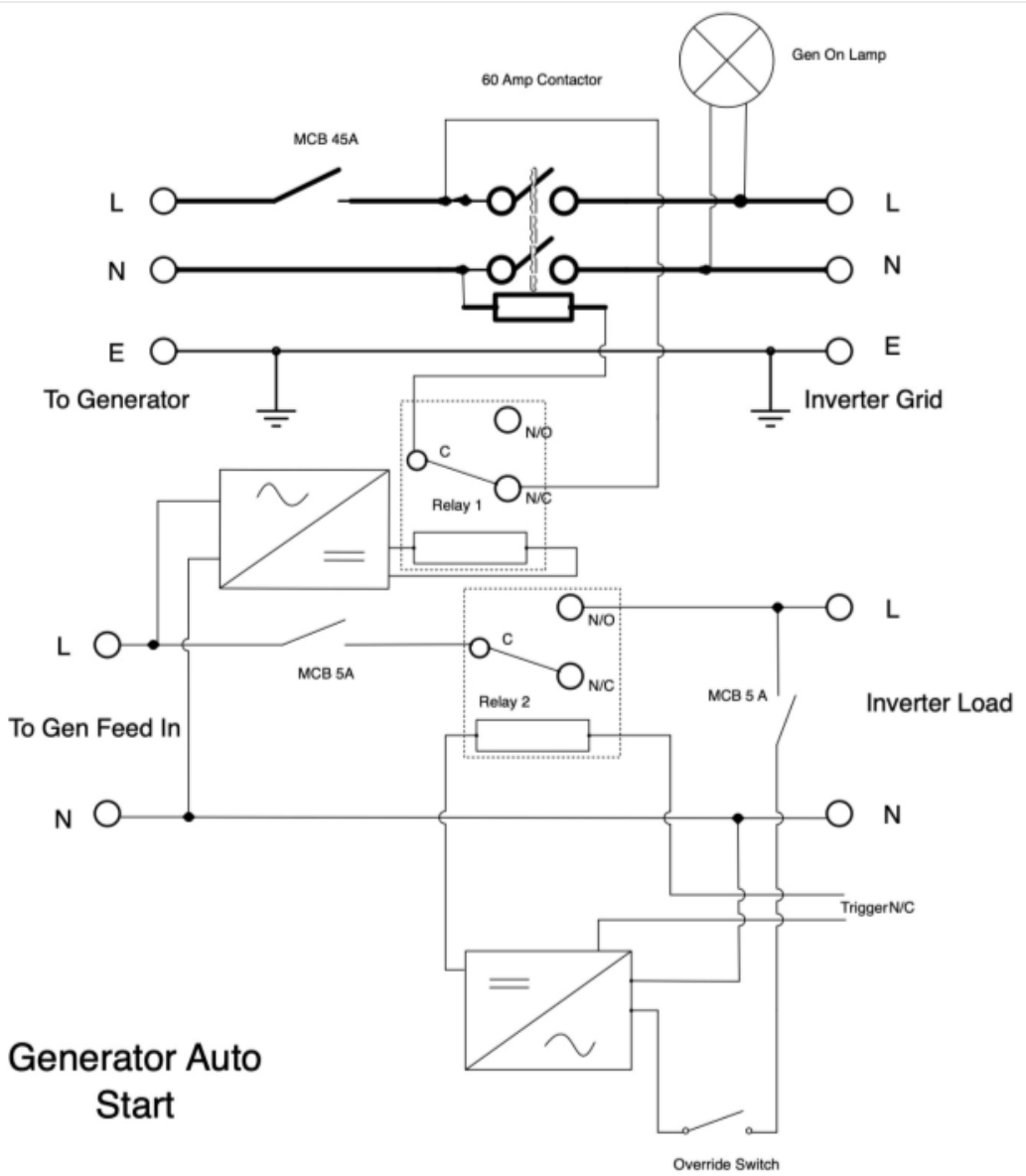

Battery Discharge Page

To configure inverter's shut-down settings, click on the BATTERY icon and then on 'Shut Down'.

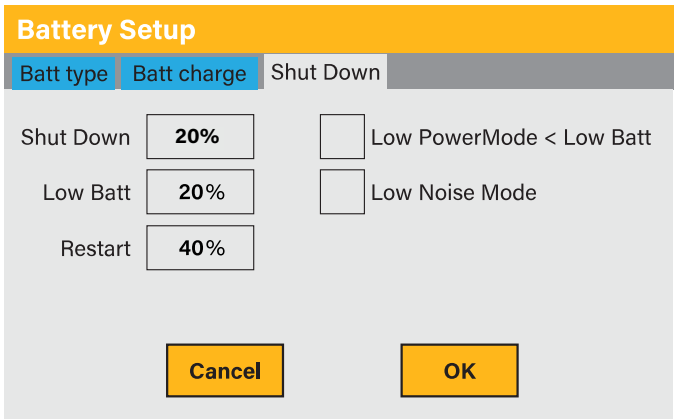

What this page displays:

- **Shutdown 20%:** It indicates the inverter will shutdown if the SOC is below this value.
- **Low Batt 20%:** It indicates the inverter will alarm if the SOC below this value.
- **Restart 40%:** Battery voltage at 40% AC output will resume.
- **Low Power Mode<Low Batt:** If selected and when battery SOC is less than the "Low Bat" value, the self-consumption power of the inverter will be from the grid and battery simultaneously. If unselected, the self-consumption power of the inverter will be mainly from the grid.
- **Low Noise Mode:** Low noise mode is used to change the switching frequency of the IGBTs from 15kHz to 20kHz, we did this because 15kHz was in the audible range still meaning that people with great hearing could hear a high pitch noise when using other electrical products, the inverter interacted with it on the AC line with electrical noise.

What you can do from this page:

- Adjust battery shut down (voltage or %)
- Adjust low battery warning (voltage or %)
- Adjust restart (voltage or %)

Setting Up a Lithium Battery

To set up a lithium-ion battery, click on the BATTERY icon and visit the 'Batt Type' column.

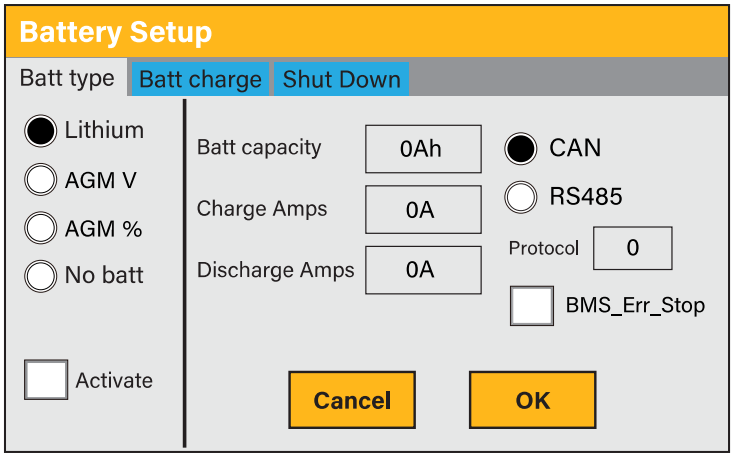

What this page displays:

- This information will only display if the 'Lithium' option is selected under 'Batt Type'.
- The type of communication protocol.
- Approved batteries.
- **BMS_Err_Stop:** When it is active, if the battery BMS fails to communicate with inverter, the inverter will stop working and report fault.

What you can do from this page:

- Set up your Lithium-ion battery.

After installing a lithium battery, check the communications page by clicking on the 'Li BMS' icon to see if the BMS information is visible. Suppose some information is not displayed correctly (it should look like the diagram below), then there will be a communication error.

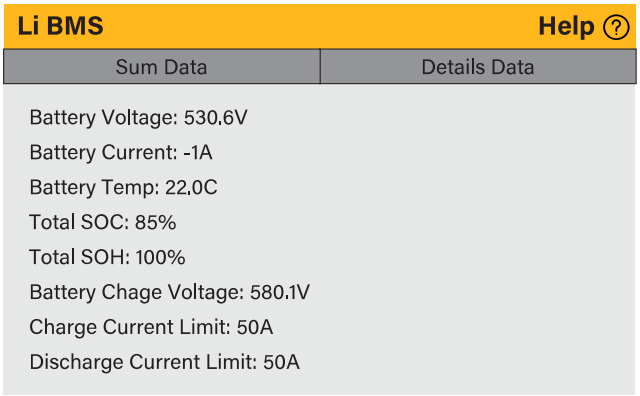

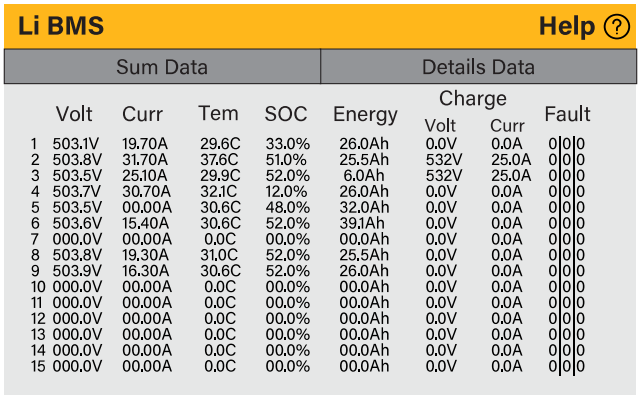

Therefore, if a communication error occurs:

1. Check that your data cable is the correct type.
2. Check that the data cable is plugged into the correct sockets. Usually, RS485 is employed, but some battery manufacturers use others.

NOTE:

With some types of lithium batteries, the BMS cannot be controlled by the Sunsynk inverter. In this case, treat the battery as a lead-acid type and set the charging and discharging protocol following the battery manufacturer's specifications.

It is crucial to refer to the manuals that manufacturers produce for their batteries. That way, the chance of errors occurring during installation is significantly reduced.

Battery Compatibility List for South Africa:

Brand	Model	RS485 or CAN	Inverter Setup	Support Inverter Parallel	Notes
SUNSYNK	Sunsynk-G HV-Series	CAN	0		CAN H: Pin 5 CAN L: Pin 4
	SUN-BATT-80				CAN H: Pin 4 CAN L: Pin 5
BLUE NOVA	BN624V-105-66K HV				CAN H: Pin 7 CAN L: Pin 8
	BN728V-105-77K HV				
	BN572V-280-160K HV				
	BN624V-280-175K HV				
	BN676V-280-189K HV				
	BN728V-280-204K HV				
FREEDOM WON	LITE BUSINESS 60/48HV		0		CAN H: Pin 7 CAN L: Pin 8
SOLAR MD	SS7017				CAN H: Pin 4 CAN L: Pin 5
	SS7018				
	SS7020				
IES	IES-BATT-157R				CAN H: Pin 4 CAN L: Pin 5
	IES-BATT-200C				
	IES-BATT-200R				

Battery Compatibility List for all other countries:

Brand	Model	RS485 or CAN	Inverter Setup	Support Inverter Parallel	Notes
Deye	BOS-G Series/GB-L Series	CAN	0	YES	
Dyness	HV Series/TOWER Series/ Orion Series			NO	
PYLON	Powercube Series/Force H Series				
Greenrich	HV IS001				
WECO	5K3-XP-EU/4k5HV/14K3 RACK				
FNS POWER	SHSIFP512050A				
Dowell	iPack CHV Series				
Sunova Ess	GT4100-E Serie				
BYD	HVS Series/HVM Series		01		
SUNSYNK	Sunsynk-G HV-Series		0		CAN H: Pin 5 CAN L: Pin 4
	SUN-BATT-80				CAN H: Pin 4 CAN L: Pin 5
BLUE NOVA	BN624V-105-66K HV				CAN H: Pin 7 CAN L: Pin 8
	BN728V-105-77K HV				
	BN572V-280-160K HV				
	BN624V-280-175K HV				
	BN676V-280-189K HV				
	BN728V-280-204K HV				
FREEDOM WON	LITE BUSINESS 60/48HV	CAN	0		CAN H: Pin 7 CAN L: Pin 8
SOLAR MD	SS7017				CAN H: Pin 4 CAN L: Pin 5
	SS7018				
	SS7020				
IES	IES-BATT-157R				CAN H: Pin 4 CAN L: Pin 5
	IES-BATT-200C				
	IES-BATT-200R				
BSL HV	ESS-GRID-HV-PACK 10	CAN	0		CAN H: Pin 4 CAN L: Pin 5

NOTE:

Ensure the cable is thick enough to support the current and that the connected fuses are of the correct rating per the battery manufacturers' recommendations.

Program Charge & Discharge Times

To set 'Charge' and 'Discharge' times, click on the 'System Mode' icon after clicking on the gear icon.

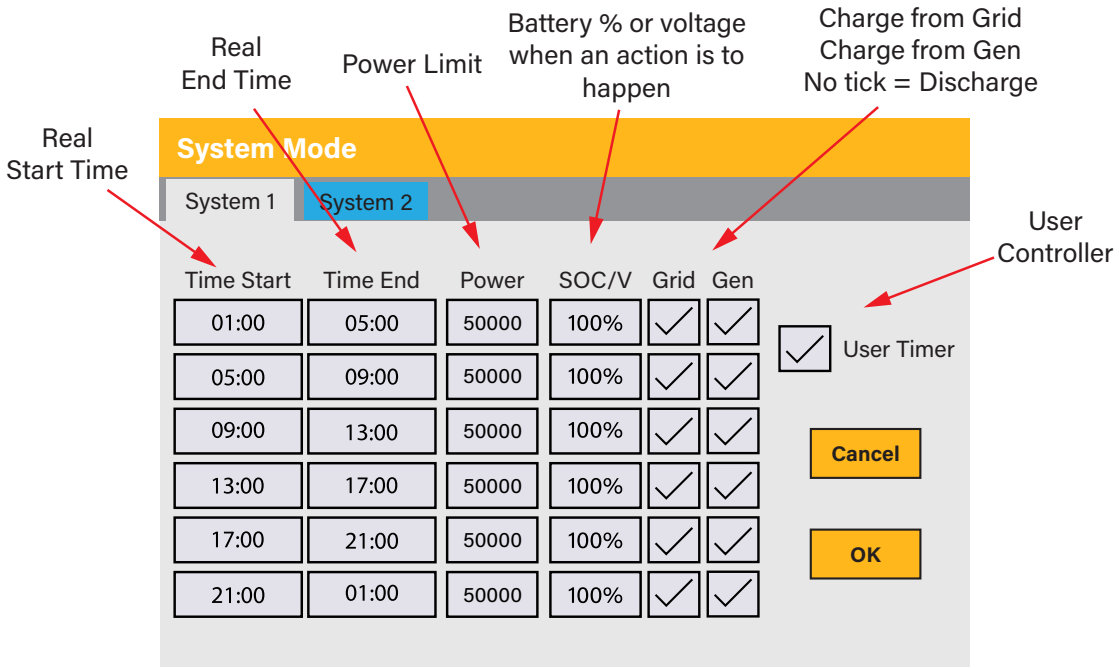

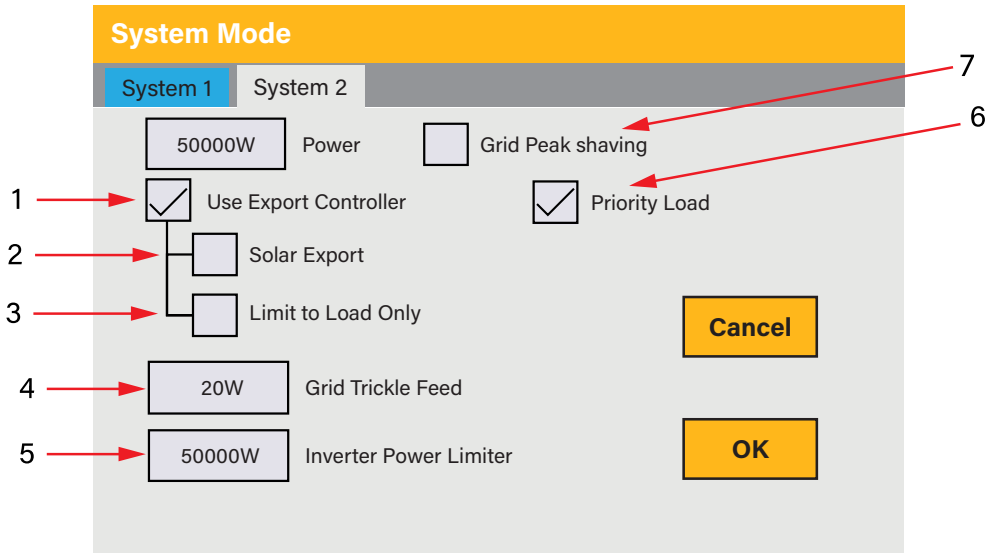

What this page displays:

1. **Use Export Controller:** Tick this box to not export power back to the grid (the CT coil will detect power flowing back to the grid and will reduce the power of the inverter only to supply the local load).
2. **Solar Export:** Tick this box if you wish to export your solar power back to the grid.
3. **Limit to Load Only:** Tick this box if you only want to supply power to the load side of the inverter.
4. **Grid Trickle Feed:** Is the amount of power flowing from the grid to the inverter. Set this value to '20 - 100W' to instruct the inverter to always take the prescribed amount of power from the grid to minimise the tripping of sensitive pre-paid electricity meters if 'Reverse Power Detection' occurs.
5. **Inverter Power Limiter:** This controls the maximum overall power, both to the 'Load' and 'Grid' ports combined. It is set to Low if an 'over-current' fault occurs.
6. **Priority Load:** Tick this box if you wish to set the solar panels to give power to the 'Load'. If you untick this box, the solar will send power to charge the batteries.

7. **Grid peak shaving:** When this is selected, the grid output power will be limited within the set value. If the load power exceeds the allowed value, it will take PV energy and stored battery energy to supplement. If there is not enough PV energy or stored energy to meet the load requirement, grid power will increase to meet the load needs.

What you can do from this page:

- Set a real time to start and stop charging or discharging the battery.
- Choose to charge the battery from the grid or generator.
- Limit export power to the grid.
- Set the unit to charge the battery from the grid or generator ticking 'Grid' or 'Gen' and set what times this needs to occur.
- Set the time to discharge the unit to the load or export to the grid by unticking 'Grid' and 'Gen'.
- **If nothing ticked:** This Mode allows the hybrid inverter to sell back any excess power produced by the solar panels to the grid. If the use time is active, the battery energy can also be sold into the grid. The PV energy will be used to power the load and charge the battery, and then excess energy will flow to the grid. Power source priority for the load is as follows:
  1. Solar Panels.
  2. Grid.
  3. Batteries (until programable % discharge is reached).

Zero Export + Limit To Load Only: The hybrid inverter will only provide power to the backup load connected. The hybrid inverter will neither provide power to the home load nor sell power to the grid. The built-in CT will detect power flowing back to the grid and will reduce the power of the inverter only to supply the local load and charge the battery.

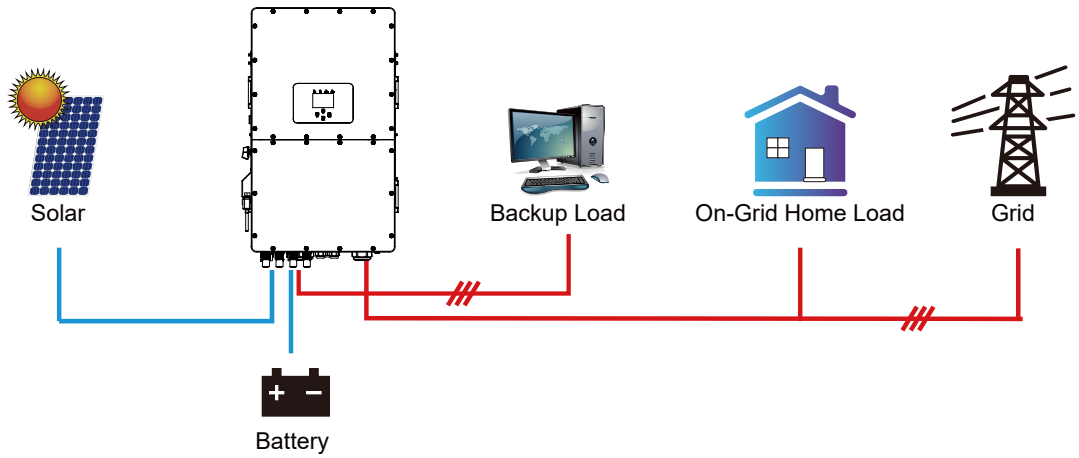

Zero Export to CT: The hybrid inverter will not only provide power to the backup load connected but also give power to the home load connected. If PV power and battery power are insufficient, it will take grid energy as a supplement. The hybrid inverter will not sell power to the grid. In this mode, a CT is needed. For the installation method of the CT, please refer to the chapter "CT Connection". The external CT will detect power flowing back to the grid and will reduce the power of the inverter only to supply the local load, charge the battery, and home load.

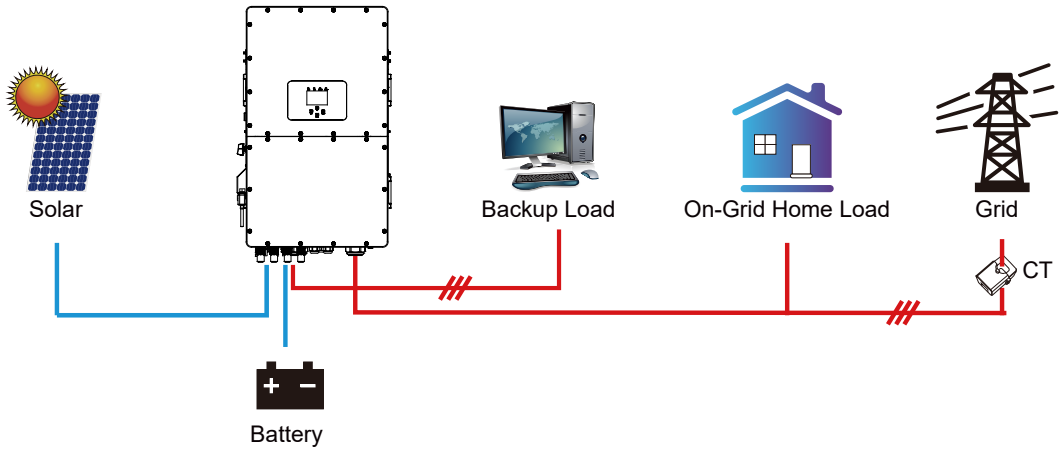

Example 1:

This example shows the battery being charged up to 100% by both the Grid and Solar PV from 8 a.m. to 11 a.m. and then being able to supply up to 4kW of battery-power to the 'essential' loads from the 'Load' Port until the battery SOC drops to 50%.

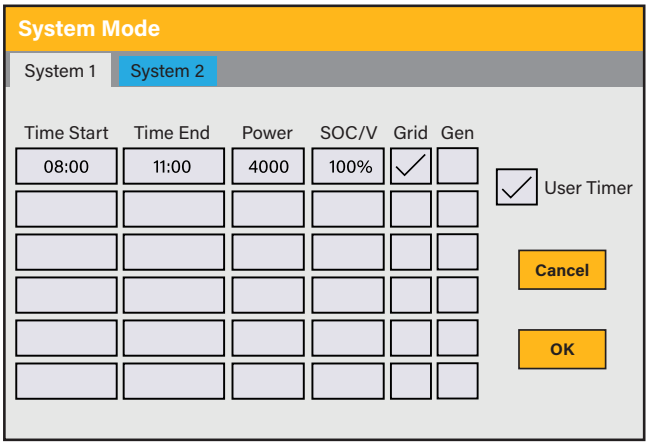

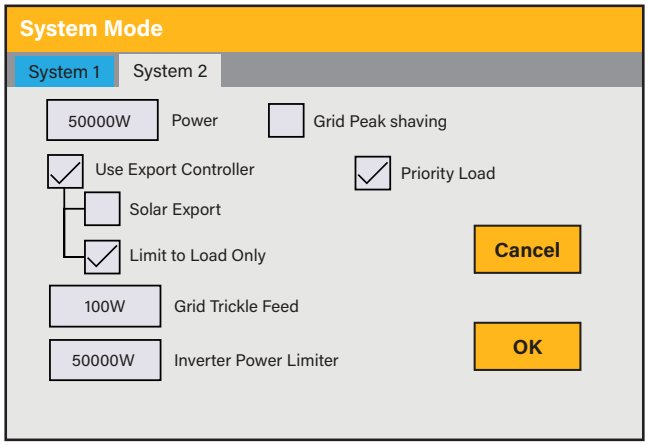

IMPORTANT - When charging the batteries from the Grid or Generator, please ensure you have set the correct battery-charging settings on the battery charge as shown in Section 'Battery Setup' Home Page. If the 'Use Timer' function is activated then the inverter will use the battery power according to your settings when the Grid is present. If this function is not set, the batteries WILL ONLY be used for backup when there is no utility grid power.

Example 2:

The power produced is supplying the 'Non-Essential Load' while the inverter is set at a maximum power of 50kW (Max Sell Power). The inverter is connected to the grid, but no export is performed. The unit allows small amounts of power to flow from the Grid (100W Zero Export Power) to prevent any back-flow. In this example, the solar PV is prioritised to supply the Load first and then subsequently, charge the battery.

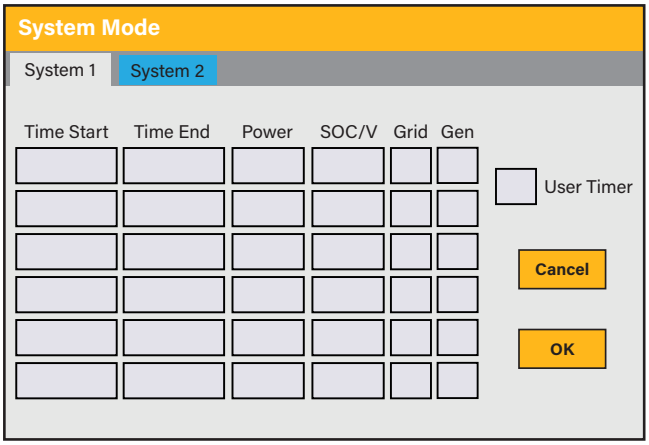

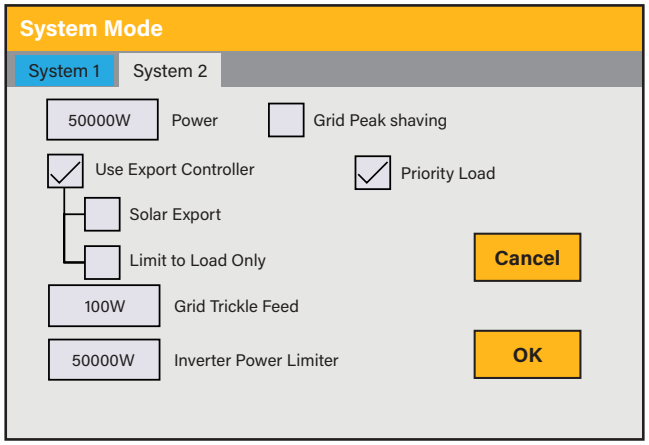

Example 3:

During 01:00-05:00, when the battery SOC is lower than 80%, it will use the grid to charge the battery until the battery SOC reaches 80%.

During 05:00-08:00 and 08:00-10:00, when battery SOC is higher than 40%, the hybrid inverter will discharge the battery until the SOC reaches 40%.

During 10:00-15:00, when the battery SOC is higher than 80%, the hybrid inverter will discharge the battery until the SOC reaches 80%.

During 15:00-18:00, when the battery SOC is higher than 40%, the hybrid inverter will discharge the battery until the SOC reaches 40%.

During 18:00-01:00, when the battery SOC is higher than 35%, the hybrid inverter will discharge the battery until the SOC reaches 35%.

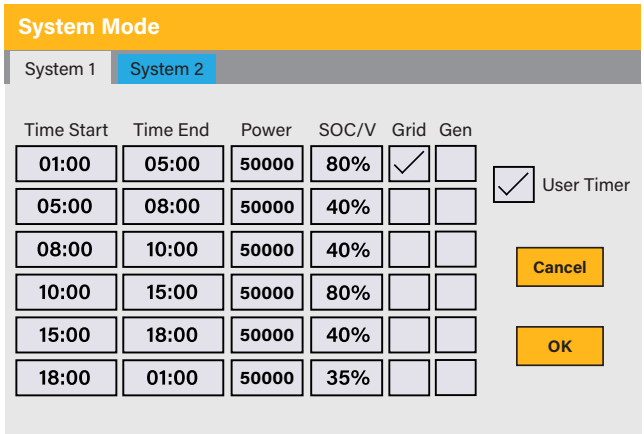

Grid Supply Page

In the Settings menu, click on the GRID icon.

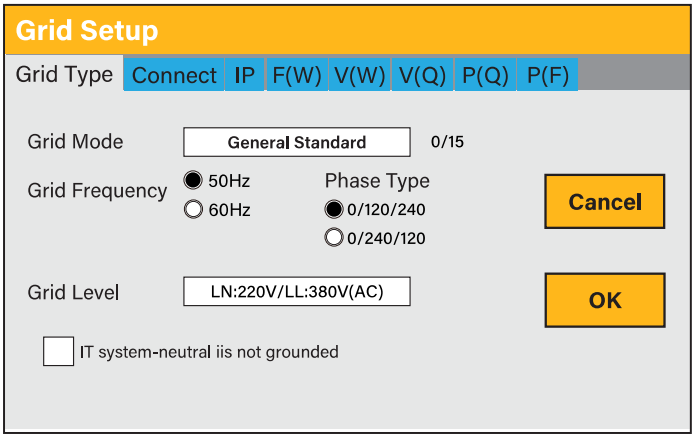

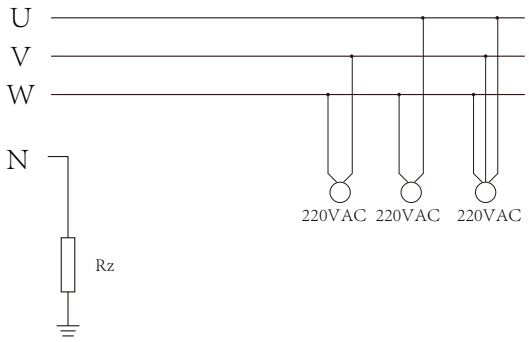

Rz: Large resistance ground resistor. Or the system doesn't have a Neutral line.

What this page displays:

- **Grid Mode:** General Standard - for example, UL1741 & IEEE1547, EN50549_CZ_PPDS_L16A, NRS097, G98/G99. Please follow your local grid code and choose the corresponding grid standard from the drop-down menu. If you cannot find your local grid standard from this menu, please manually input the grid settings as per instructions below.
- **Grid Level:** There are several voltage levels for the inverter output voltage in off-grid mode. LN:220V/LL:380V(AC), LN:230V/LL:400V(AC).
- **IT system:** For the IT grid system, the Line voltage (between any two lines in a three-phase circuit) is 230Vac. If your grid system is an IT system, please enable “IT system” and tick the “Grid level” as LN:230V/LL:400V(AC), as the picture above shows.

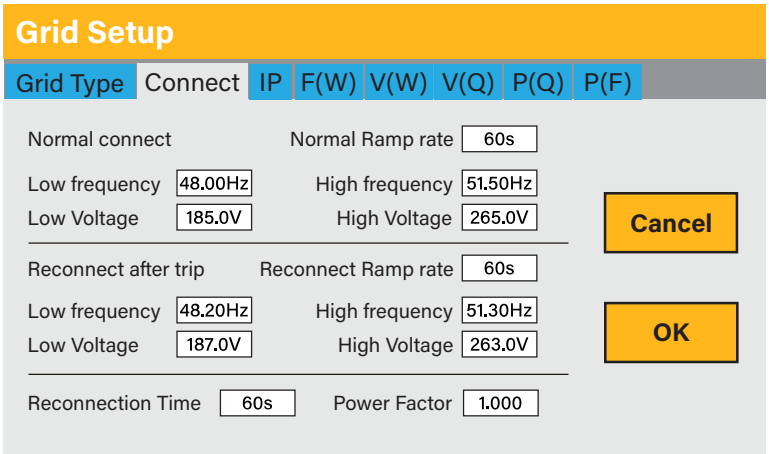

What this page displays:

- **Normal connect:** The allowed grid voltage/frequency range when the inverter first time connects to the grid.
- **Normal Ramp rate:** It is the startup power ramp.
- **Reconnect after trip:** The allowed grid voltage/frequency range for the inverter connects the grid after the inverter trip from the grid.
- **Reconnect Ramp rate:** It is the reconnection power ramp.
- **Reconnection time:** The waiting time period for the inverter to connect the grid again.
- **Power factor:** This is used to adjust the inverter's reactive power.

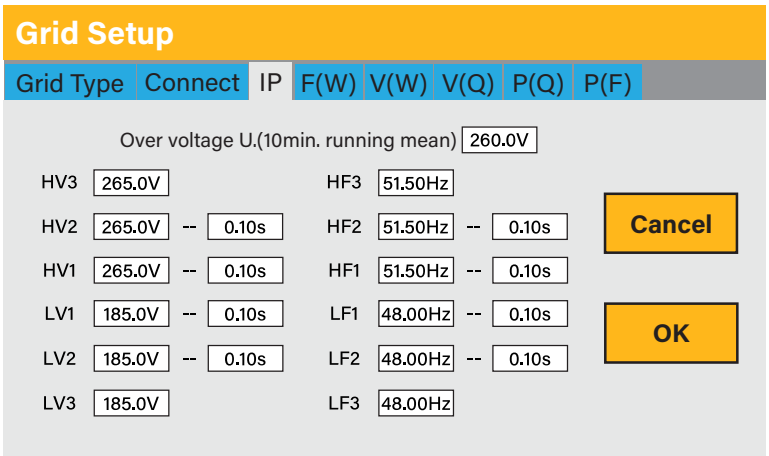

What this page displays:

- **HV1:** Level 1 overvoltage protection point;
- **HV2:** Level 2 overvoltage protection point;
- **HV3:** Level 3 overvoltage protection point.
- **LV1:** Level 1 undervoltage protection point;
- **LV2:** Level 2 undervoltage protection point;
- **LV3:** Level 3 undervoltage protection point.
- **HF1:** Level 1 over frequency protection point;
- **HF2:** Level 2 over frequency protection point;
- **HF3:** Level 3 over frequency protection point.
- **LF1:** Level 1 under frequency protection point;
- **LF2:** Level 2 under frequency protection point;
- **LF3:** Level 3 under frequency protection point;
- **0.10s:** Trip time.

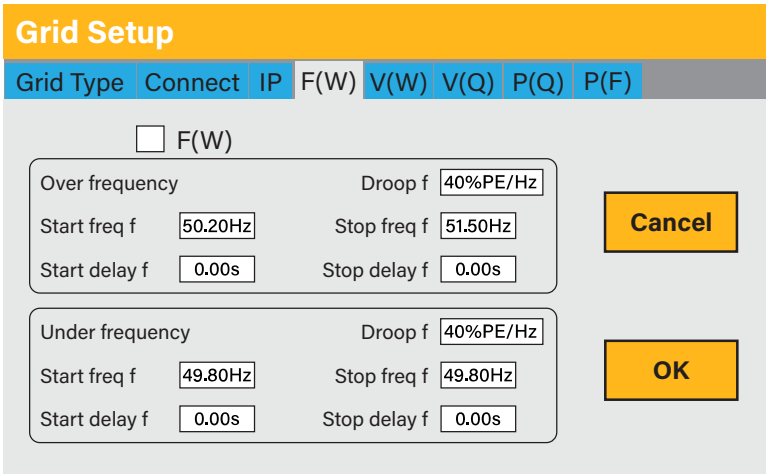

What this page displays:

- **FW:** This series inverter is able to adjust inverter output power according to grid frequency.
- **Droop f:** The percentage of nominal power per Hz.

For example: "Start freq f>50.2Hz, Stop freq f<51.5, Droop f=40%PE/Hz" when the grid frequency reaches 50.2Hz, the inverter will decrease its active power at Droop f of 40%. And then, when the grid system frequency is less than 50.2Hz, the inverter will stop decreasing output power. For the detailed setup values, please follow the local grid code.

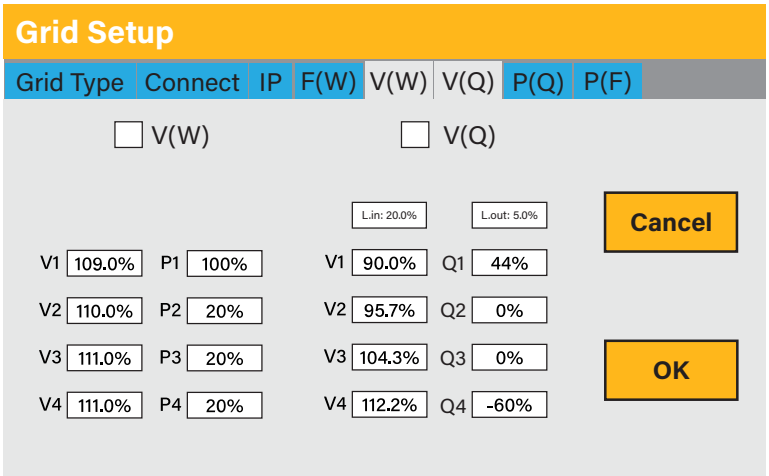

What this page displays:

- **V(W):** It adjusts the inverter active power according to the set grid voltage.
- **V(Q):** It adjusts the inverter reactive power according to the set grid voltage. This function adjusts inverter output (active and reactive) power when grid voltage changes.
- **Lock-in/Pn 5%:** When the inverter active power is less than 5% rated power, the VQ mode will not take effect.
- **Lock-out/Pn 20%:** If the inverter active power increases from 5% to 20% rated power, the VQ mode will take effect again.

For example: V2=110%, P2=20%. When the grid voltage reaches 110% times of rated grid voltage, the inverter output power will reduce its active output power to 20% rated power.

For example: V1=90%, Q1=44%. When the grid voltage reaches 90% times of the rated grid voltage, the inverter output power will output 44% reactive output power.

For the detailed setup values, please follow the local grid code.

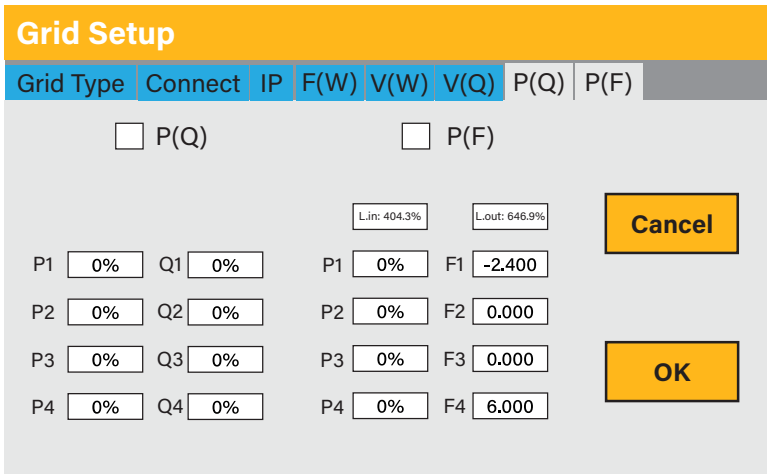

What this page displays:

- **P(Q):** It adjusts the inverter reactive power according to the set active power.
- **P(PF):** It adjusts the inverter PF according to the set active power.
- **Lock-in/Pn 50%:** When the inverter output active power is less than 50% rated power, it won't enter the P(PF) mode.
- **Lock-out/Pn 50%:** When the inverter output active power is higher then 50% rated power, it will enter the P(PF) mode.

For the detailed setup values, please follow the local grid code.

NOTE:

Only when the grid voltage is equal to or higher than 1.05 times the rated grid voltage will the P(PF) mode take effect.

Paralleling Inverters Advanced Settings

To configure multi-inverter settings, click on the ADVANCE icon.

NOTE:

Parallel feature is max up to 10 inverters.

In parallel operation, the setting “Limit to load only” falls away, and the inverter can only be used to power essential and non-essential loads, and the CT position needs to be correct.

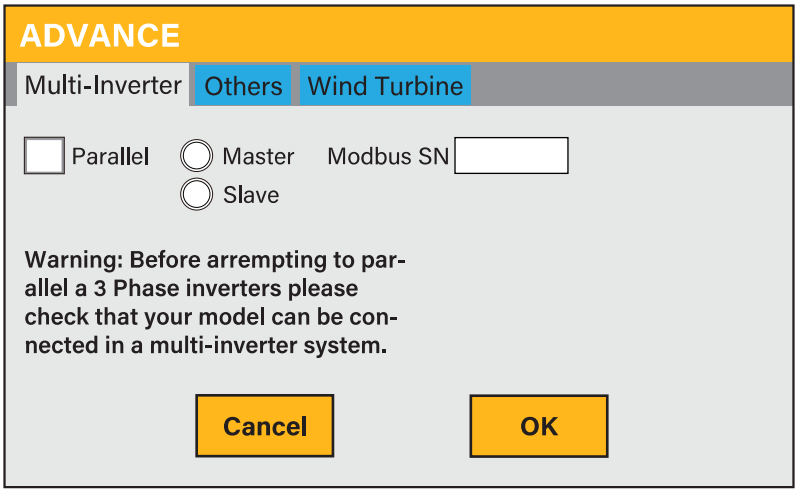

What this page displays:

If the inverter operates as a master or a slave.

- **Modbus Device ID:** ‘Modbus SN’ that must be unique for each inverter connected to the bus/wire.

What you can do from this page:

- Set the inverter as a master or slave per bus/wire.
- Set the Modbus SN for paralleling.

Each inverter will require a fuse isolator with surge protection and each group circuit will require an RCD. If the batteries as supplying power to the main load during the outage, then a change over switch will also be required or a split load can be used.

- The CT coils used to limit export power must only be connected to the master. Therefore, if six inverters are paralleled, three CT coils will be required.
- Connect a RJ45 communication cable between each inverter; the order is not important since both sockets are the same, so there is no IN or OUT.
- Each inverter must have a unique Modbus number.
- The maximum length of the communication cables is 2 meters (do not exceed this value).

IMPORTANT: When configuring inverters in parallel, it is important to first check firmware versions to be all the same on all inverters. It is strongly recommended to request firmware update on all inverters to the latest and the exact same firmware version.

IMPORTANT: All inverters in a parallel system must have their own isolating load breaker before it goes to the parallel breaker to ensure while programming that the load outputs are isolated from each other.

Only once confirmed all inverters are programmed correctly in parallel or three-phase then only the isolating breakers can be switched on, which then feeds to the main load output breaker where the actual parallel or three-phase connection is made that feeds the loads.

NOTE:

The cables have two ends, one to be specifically connected to the BMS and another one to be connected to the inverter, do not change it. If the communication is not working correctly between inverters, then errors will appear on display. In this case, please check all settings and data cables.

- All inverters in a parallel system must have their own isolating load breaker before it goes to the parallel breaker to ensure while programming that the load outputs are isolated from each other.
- The grid input must also be connected in parallel.

If you need further help please refer to the Sunsynk website where you will find training videos and Frequently Asked Questions www.sunsynk.com. Firmware prior installation is important to be updated and all inverters in parallel or three phase system must be the same.

Common questions that occur when paralleling inverters:

Q1: What is the sequence to install/connect/commission?

First of all, leave the main supplies off. Next, connect all communication cables, set up all LCDs and then, last of all, turn on the main supplies.

Q2: What are the indications that the communication and the system are OK or not?

Parallel errors will be shown as fault F46 on the display.

Q3: What are the consequences of not setting one inverter in a parallel mode?

It can damage the inverter.

Q4: What are the consequences of having more than one Master Inverter or having no inverter set as 'Master'?

It can damage the inverter. There are cases in which it is possible to have more than one master. For example, as aforementioned, six inverters paralleled in a three phase utility grid (three masters).

Q5: What are the consequences for setting A, B, or C phases wrong while in parallel mode?

It can damage the inverter. Recommend checking the phase rotation with a meter before switching on.

Q6: What are the consequences of factory resetting, power cycling, or firmware updating one inverter in a parallel system?

It can damage the inverter. Inverters needs to be isolated from each other before factory reset or firmware update.

Q7: What consequences for changing ALL/ANY settings while operating in parallel mode?

It can damage the inverter and fault F46 will be indicated on the display.

Connecting the DRM's

This can be selected under advance settings. *For AS4777 Standard.

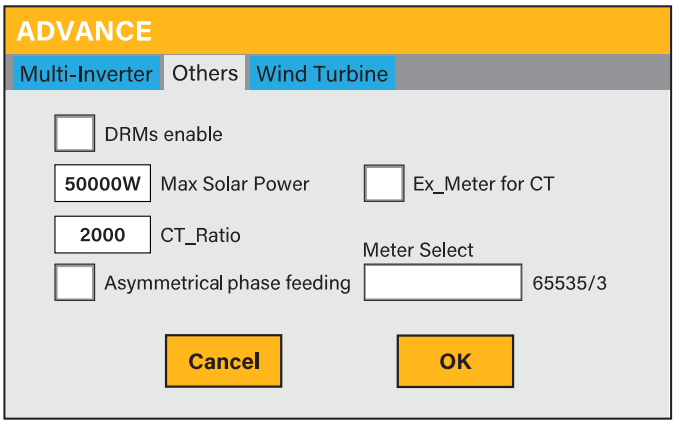

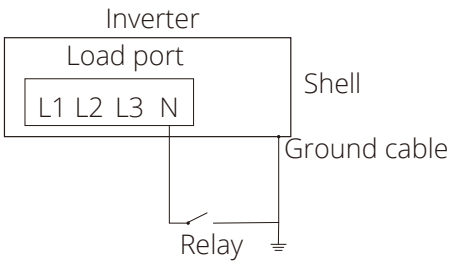

- **Ex_Meter For CT:** when in a Three-phase system with a CHiNT Three-phase energy meter (DTSU666), click the corresponding phase where the hybrid inverter is connected. e.g. when the hybrid inverter output connects to A phase, please click A Phase.
- **Asymmetrical phase feeding:** If it was checked, the inverter will take power from the grid balance of on each phase (L1/L2/L3) when needed.
- Select the meter connection.

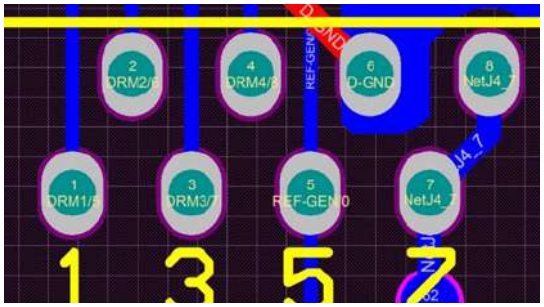

1. DRM 1/5
2. DRM 2/6
3. DRM 3/7
4. DRM 4/8
5. Ref 0
6. D Ground
7. Net J 4-7
8. Net J 4-7

Solar Power Generated

This page shows the daily, monthly, yearly, and total solar power produced. Access this page by clicking on the 'Solar/Turbine' icon on the Home Page.

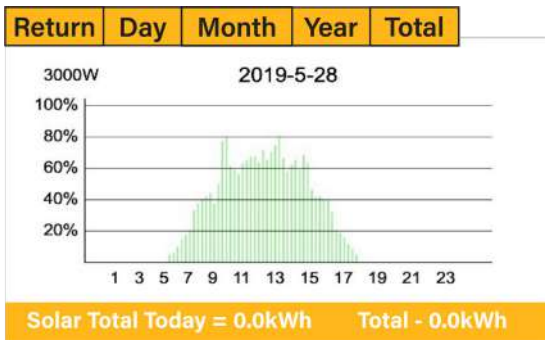

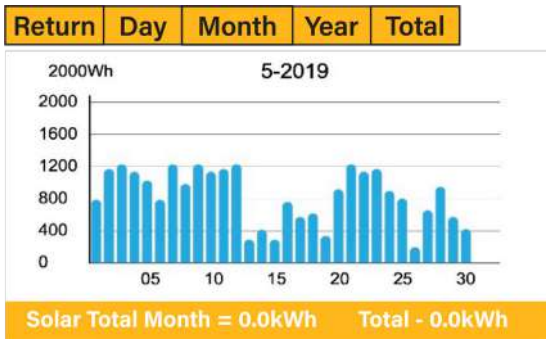

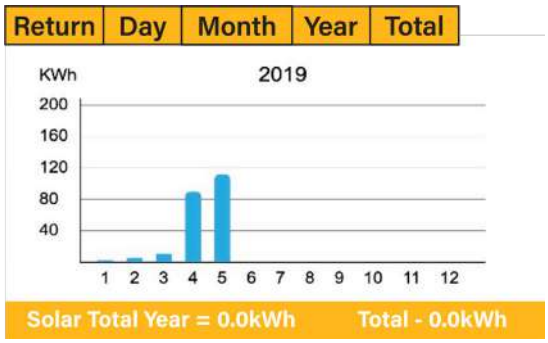

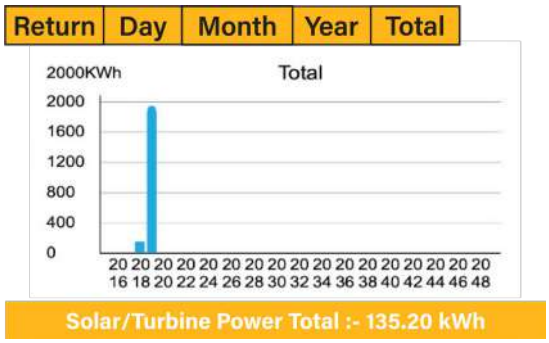

Grid Power

This page shows the Daily / Monthly / Yearly and total grid power export or consumed. Access this page by clicking on the 'Solar/Turbine' icon on the Home Page.

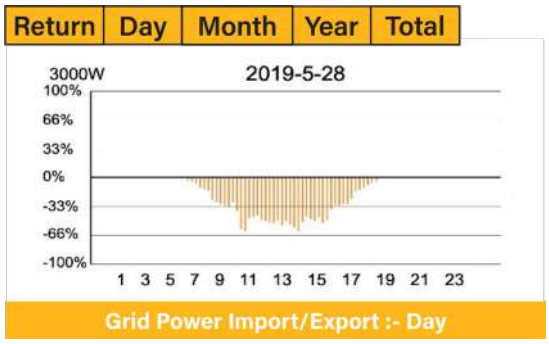

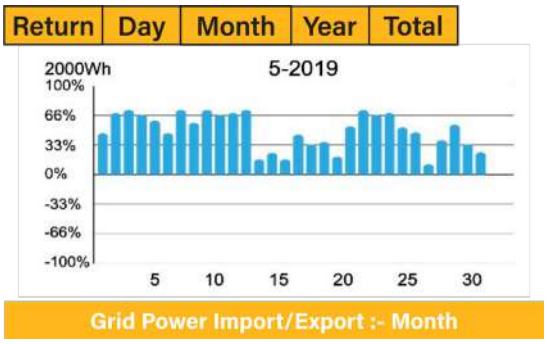

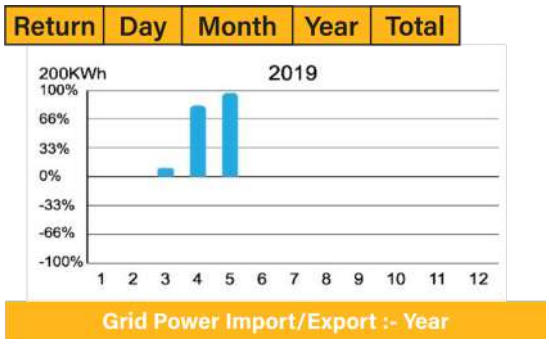

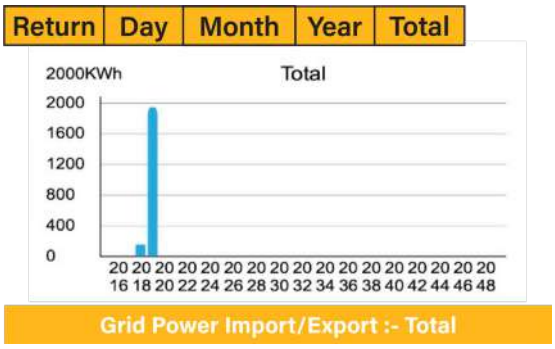

Advanced Settings for Auxiliary Load

To configure Auxiliary Load (previously known as “smart load”) settings, click on the AUX LOAD icon.

What this page displays:

- Use of the Gen (Aux) input or output.
- Generator peak shaving is ON or OFF.
- Peak Power Shaving value.

What you can do from this page:

- Set up a generator input.
- Set up an auxiliary (smart) load.
- Switch on the generator and/or grid peak power saving and set the power shaving value.
- Use an additional inverter or micro inverter.

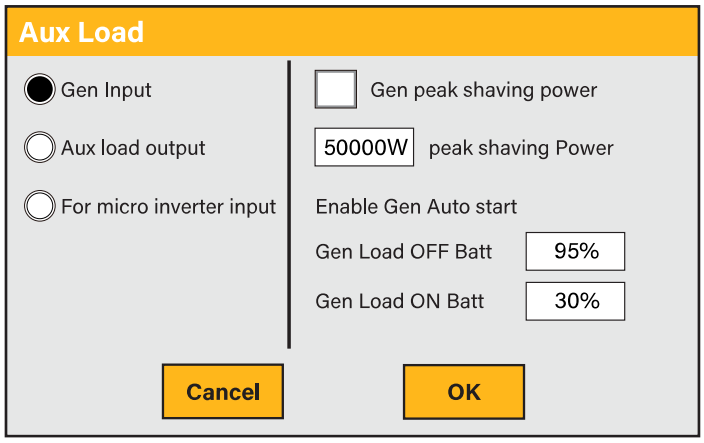

A nice feature of this page is that when the batteries are full and the inverter is still producing power from the solar PV or turbine, it is possible to direct the power generated to another load such as a water heater.

For Gen Input mode:

- **Gen Input:** Tick this box if using a Generator. Allowed Max. power from diesel generator.
- **Peak shaving power:** This is a technique used to reduce electrical power consumption during periods of maximum demand on the utility grid. This enables the user to save substantial amounts of money due to the expensive peak power charges.
- **Gen Load OFF Batt:** Battery level when the Aux load switches off.
- **Gen Load ON Batt:** Battery level when the Aux load switches on.

For Aux Load Output mode:

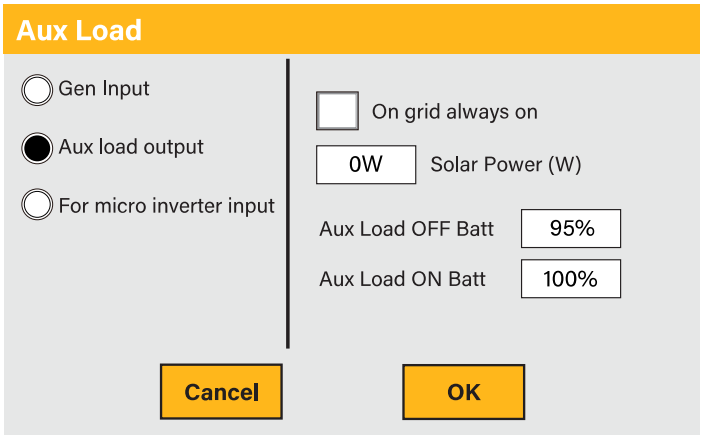

- **Aux Load Output:** This mode utilizes the Gen input connection as an output which only receives power when the battery SOC and PV power is above a user programmable threshold.
- **For Example:** Power=500W, ON: 100%, OFF=95%. When the PV power exceeds 500W, and battery bank SOC reaches 100%, Smart Load Port will switch on automatically and power the load connected. When the battery bank SOC < 95% or PV power < 500w, the Smart Load Port will switch off automatically.
- **On Grid always on:** When click "on Grid always on" the smart load will switch on when the grid is present.

- **Solar Power:** Power limiter to the maximum power allowed to the Aux load.
- **Aux Load OFF Batt** Battery SOC at which the Smart load will switch off.
- **Aux Load ON Batt:** Battery SOC at which the Smart load will switch on. Also, the PV input power should exceed the setting value (Power) simultaneously and then the Smart load will switch on.

For Micro Inverter Input mode:

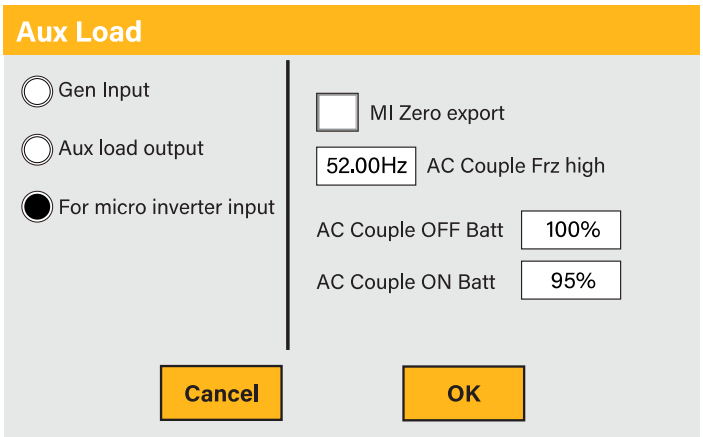

- **Micro Inverter Input:** To use the Generator input port as a micro-inverter on grid inverter input (AC coupled), this feature will also work with "Grid-Tied" inverters. Tick this box if intending to connect a supplementary inverter or micro inverter.
- **AC Couple OFF Batt:** When the battery SOC exceeds setting value, Microinveter or the grid-tied inverter will shut down.
- **AC Couple ON Batt:** If choosing “Micro Inv input”, as the battery SOC reaches a gradually setting value (OFF), during the process, the microinverter output power will decrease linearly. When the battery SOC equals to the setting value (OFF), the system frequency will become the setting value (AC couple Frz high), and the Microinverter will stop working and stop exporting power produced by the microinverter to the grid.

NOTE:

Micro Inv Input OFF and On is valid for certain FW versions only.

OPERATION MODES

Mode I: Basic

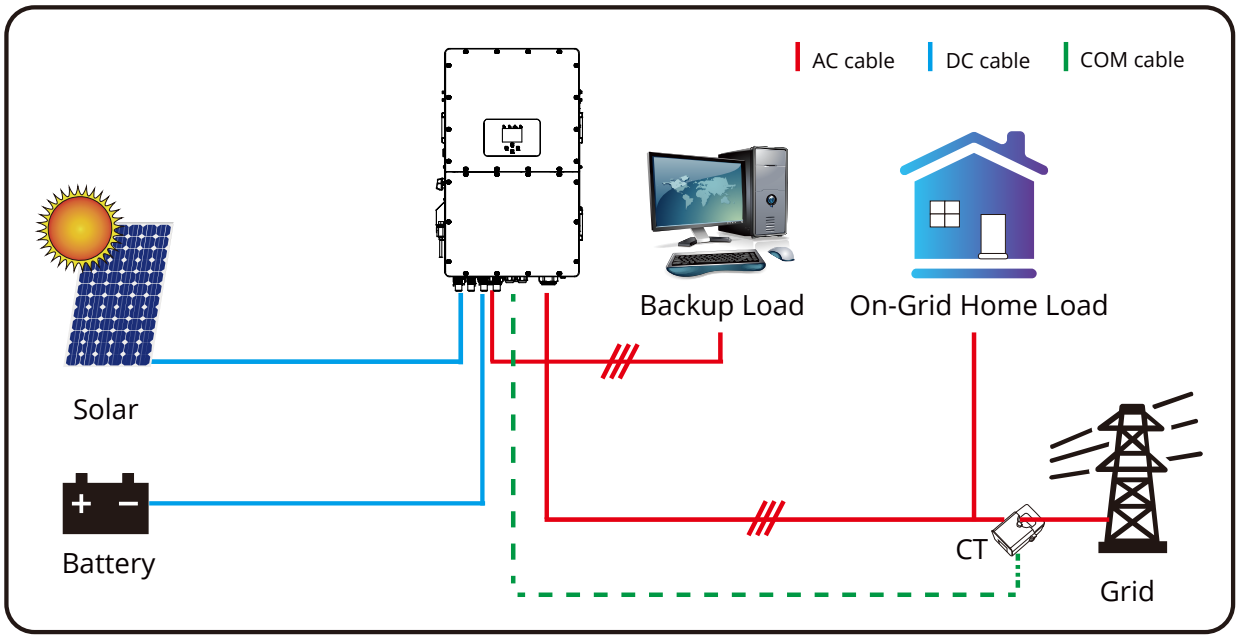

Mode II: With Generator

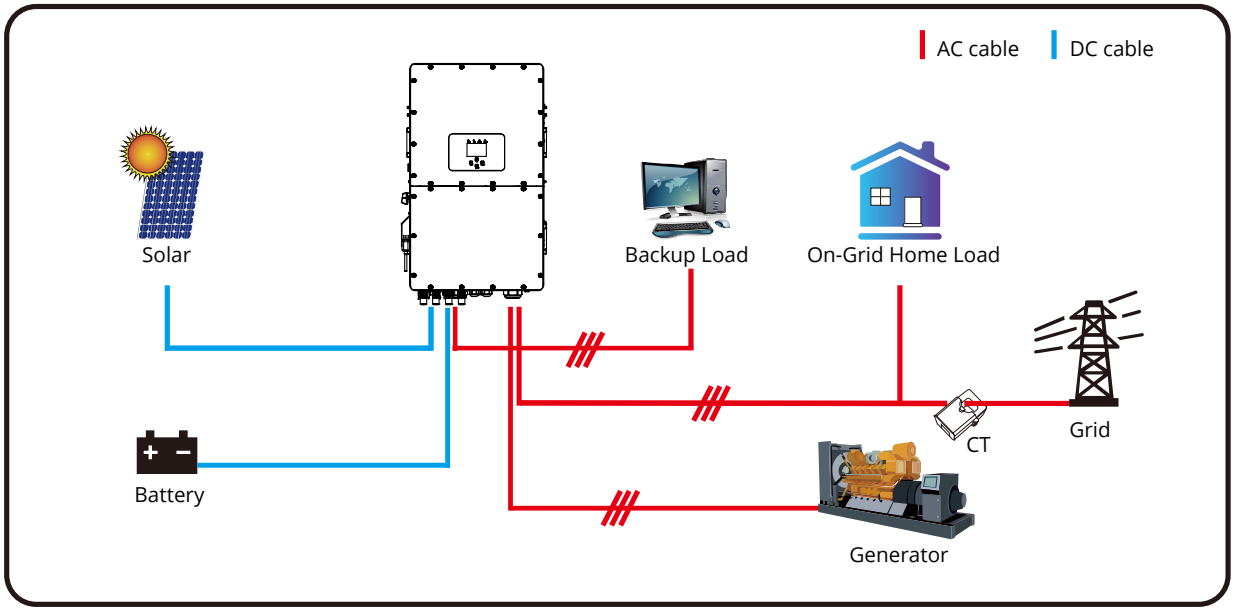

Mode III: With Aux-Load

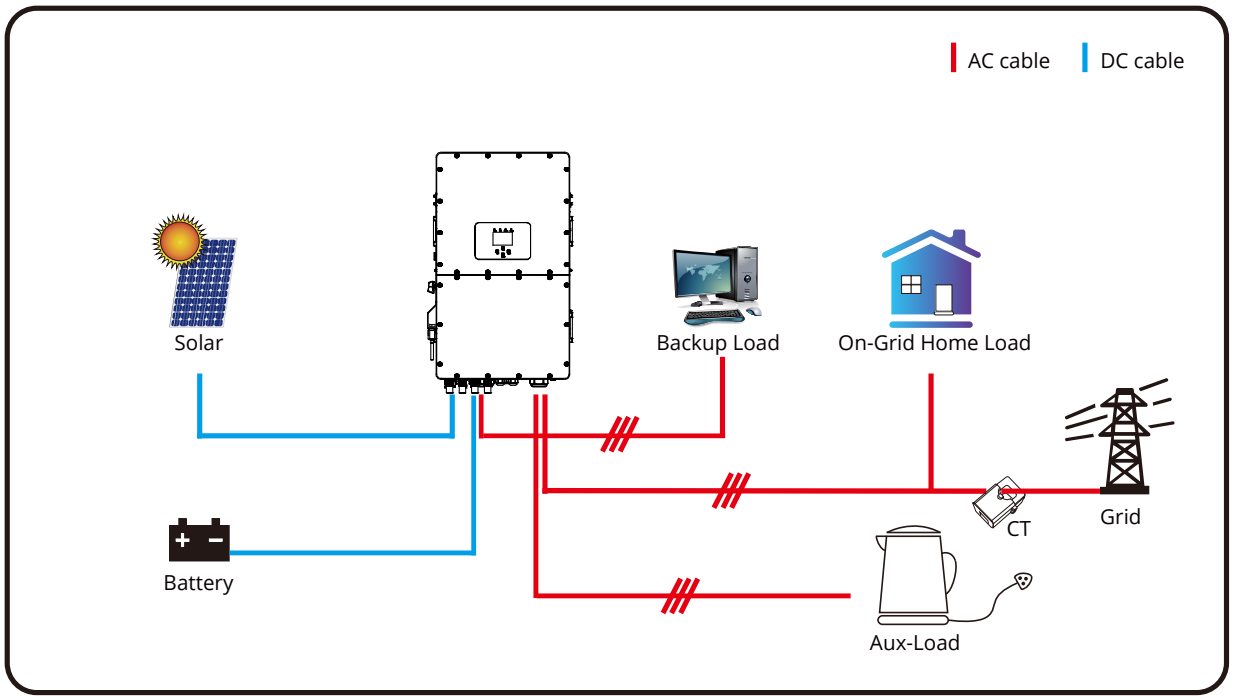

Mode IV: AC Couple

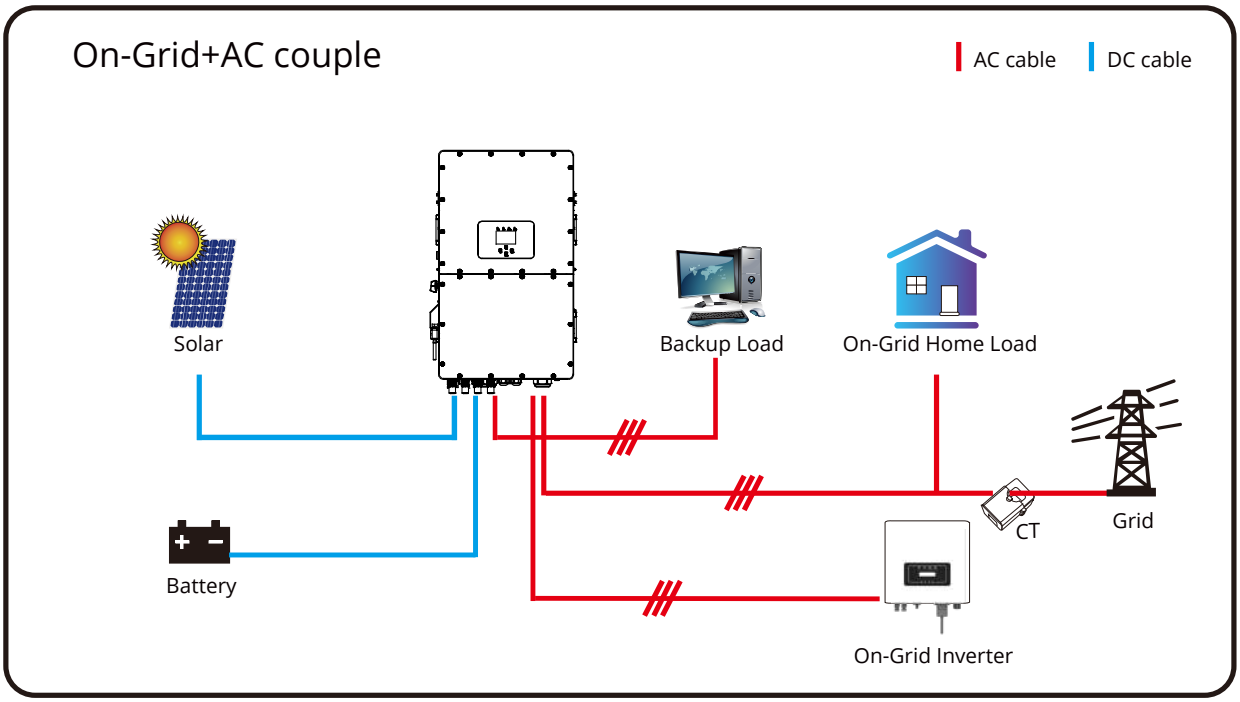

Mode V: Grid-Tied

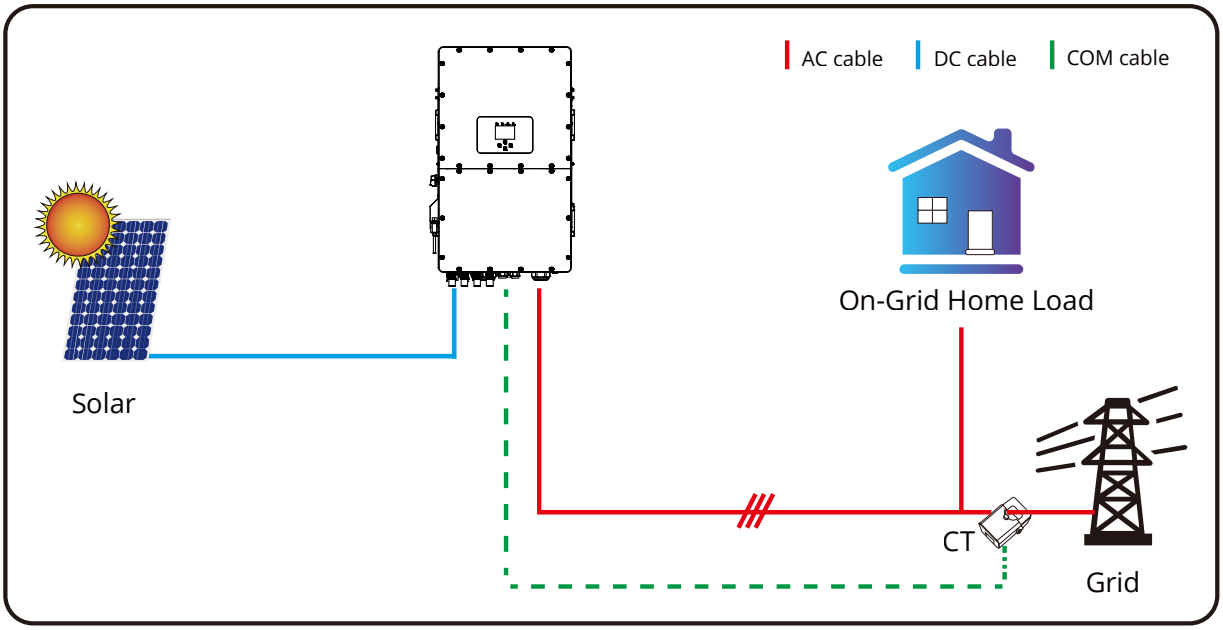

NOTE:

The 1st priority power of the system is always the PV power, then 2nd and 3rd priority power will be the battery bank or grid according to the settings.

The last power backup will be the Generator if it is available.

WARRANTY

For warranty details, please refer to the Warranty Statement suplyed by Sunsynk.

Under our company's guidance, customers may return products for maintenance or replacement of equivalent value. Customers are responsible for shipping and associated costs. Any replaced or repaired product retains the remaining warranty period. If a product or component is replaced by the company during the warranty period, ownership rights of the replacement belong to the company.

Factory warranty does not cover damages resulting from:

- Transportation mishaps
- Incorrect installation or commissioning
- Failure to follow operation, installation, or maintenance instructions
- Attempts to modify, alter, or repair products
- Incorrect usage or operation
- Inadequate equipment ventilation
- Non-compliance with safety standards or regulations
- Natural disasters or force majeure (e.g., floods, lightning, overvoltage, storms, fires, etc.)

Normal wear or minor failures that do not affect product functionality are not considered defects. External scratches, stains, or mechanical wear do not indicate product defects.

TROUBLESHOOTING

To check the fault codes click on the FAULT CODES icon on the settings menu.

FAULT CODES

Alarms Code	ID:2004244320	Occured
F56	DC_VoltLow_Fault	2022-01-26 12:45
F56	DC_VoltLow_Fault	2022-01-24 11:00
F56	DC_VoltLow_Fault	2022-01-07 18:19
F56	DC_VoltLow_Fault	2022-01-08 01:58
F56	DC_VoltLow_Fault	2021-11-09 13:22
F56	DC_VoltLow_Fault	2021-11-03 17:48
F56	DC_VoltLow_Fault	2021-10-27 16:31
F56	DC_VoltLow_Fault	2021-10-20 19:17

Follow the solutions in the table below to troubleshoot issues. If these methods do not resolve the problem, please contact our after-sales service.

Before contacting support, please gather the following information to expedite troubleshooting:

- Inverter Information: Include serial number, firmware version, installation date, fault occurrence time, and frequency.
- Installation Environment: Describe weather conditions, and note if PV modules are sheltered or shaded. Providing photos and videos can assist in analyzing the problem.
- Utility Grid Status: Provide details about the utility grid situation.

This information will help our support team quickly identify and resolve any issues you encounter.

Error Code	Description	Solutions
W01	Reserved	
W02	FAN_IN_Warn	1. Check the operating status of the fan. 2. If the fan is running abnormally, open the cover of the inverter to check the connection of the fan.
W03	Grid_phase_warn	1. Check the phase sequence connection of the power grid. 2. Try to change the grid type, 0, 240/120. 3. If there is still no solution to check the wiring at the grid end.
W04	Meter_offline_warn	Meter communication failure Check whether the meter has successful communication and whether the wiring is normal.
W05	CT_WRONG_direction_warn	Check whether the arrow on CT's case point to the inverter or not , and check if the installation location of CTs are correct.
W06	CT_Notconnect_warn	Check whether the wires of CTs are connected correctly or not.
W07	FAN_OUT1_Warn	Check whether the FAN are connected correctly and operating normally.

Error Code	Description	Solutions
W08	FAN_OUT2_Warn	Check whether the FAN are connected correctly and operating normally.
W09	FAN_OUT3_Warn	Check whether the FAN are connected correctly and operating normally.
W10	VW_activate	1. Measure whether the grid port voltage is too high. 2. Check whether the AC cable is too thin to carry current.
W31	Battery_comm_warn	Abnormal battery communication 1. Check whether the BMS connection is stable. 2. Check whether the BMS data is abnormal.
W32	Parallel_comm_warn	Unstable parallel communication 1. Check the connection of the parallel communication line. Please do not wind the parallel communication line with other cables. 2. Check whether the parallel dip switch is on.
F01	DC_Inversed_Failure	Check the PV input polarity
F02	DC_Insulation_Failure	Check whether the PV is grounded, secondly, check whether the impedance of the PV to the ground is normal.
F03	GFDI_Failure	1.Check whether the PV modules are grounded. 2. Check whether the impedance of the PV to the ground is normal, whether there is leakage current.
F04	GFDI_Ground_Failure	Check whether the PV is grounded.
F05	EEPROM_Read_Failure	Restart the inverter 3 times and restore the factory settings.
F06	EEPROM_Write_Failure	Restart the inverter 3 times and restore the factory settings.
F07	DCDC1_START_Failure	The BUS voltage can't be reached by PV or battery. 1. Switch off the DC switches and restart the inverter
F08	DCDC2_START_Failure	The BUS voltage can't be reached by PV or battery. 1. Switch off the DC switches and restart the inverter
F09	IGBT_Failure	Restart the inverter 3 times and restore the factory settings.
F10	AuxPowerBoard_Failure	1. First check whether the inverter switch is open. 2. Restart the inverter 3 times and restore the factory settings.
F11	AC_MainContactor_Failure	Restart the inverter 3 times and restore the factory settings.
F12	AC_SlaveContactor_Failure	Restart the inverter 3 times and restore the factory settings.
F13	Working_Mode_Change	1. When the grid type and frequency changed it will report F13. 2. When the battery mode was changed to "No Battery" mode, it will report F13. 3. For some old FW version, it will report F13 when the system work mode changed. 4. Generally, it will desappear automatically when shows F13; 5. If it remains same, turn on DC and AC switches for one minute, then turn on the DC and AC switches.
F14	DC_OverCurr_Failure	Restart the inverter 3 times and restore the factory settings.

Error Code	Description	Solutions
F15	AC_OuverCurr_SW_Failure	AC side over current fault 1. Please check whether the backup load power and common load power are within the range. 2. Restart and check whether it is normal.
F16	GFCI_Failure	Leakage current fault 1. Check the PV side cable ground connection. 2. Restart the system 2-3 times.
F17	Tz_PV_OverCurr_Fault	1. Check the PV connection and whether the PV is unstable. 2. Restart the inverter 3 times.
F18	Tz_AC_OverCurr_Fault	AC side over current fault 1. Please check whether the backup load power and commonload power are within the range. 2. Restart and check whether it is normal.
F19	Tz_Integ_Fault	Restart the inverter 3 times and restore the factory settings.
F20	Tz_Dc_Overcurr_Fault	DC side over current fault 1. Check PV module connect and battery connect. 2. When in the off-grid mode, the inverter startup with a big power load, and it may report F20. Please reduce the load power connected. 3. Turn off the DC and AC switches, wait one minute, and then turn on the DC/AC switch again.
F21	Tz_HV_Overcurr_fault	BUS over current. 1. Check the PV input current and battery current settings. 2. Restart the system 2-3 times.
F22	Tz_EmergStop_Fault	Remotely shutdown 1. It tells the inverter is remotely controlled.
F23	Tz_GFCI_OC_Fault	Leakage current fault 1. Check PV side cable ground connection. 2. Restart the system 2~3 times.
F24	DC_Insulation_Fault	PV isolation resistance is too low 1. Check if the connection of PV panels and inverter are firmly connected. 2. Check if the earth bond cable on inverters is connected to the ground.
F25	DC_Feedback_Fault	Restart the inverter 3 times and restore the factory settings.
F26	BusUnbalance_Fault	1. Please wait for a while and check whether it is normal. 2. When the load power of 3 phases is big different, it will report the F26. 3 .When there's DC leakage current, it will report F26. 4. Restart the system 2~3 times.
F27	DC_Insulation_Fault	Restart the inverter 3 times and restore the factory settings.
F28	DCIOver_M1_Fault	Restart the inverter 3 times and restore the factory settings.

Error Code	Description	Solutions
F29	Parallel_Comm_Fault	1. When in parallel mode, check the parallel communication cable connection and hybrid communication address settings. 2. During the parallel system startup period, inverters will report F29. When all inverters are in ON status, it will disappear automatically.
F30	AC_MainContactor_Fault	Restart the inverter 3 times and restore the factory settings.
F31	AC_SlaveContactor_Fault	1. Check whether the grid orientation is correct. 2. Restart the inverter 3 times and restore the factory settings.
F32	DCIOver_M2_Fault	Restart the inverter 3 times and restore the factory settings.
F33	AC_OverCurr_Fault	1. Check whether the grid current is too large. 2. Restart the inverter 3 times and restore the factory settings.
F34	AC_Overload_Fault	Check the backup load connected, make sure it is in allowed power range.
F35	AC_NoUtility_Fault	Check the grid voltage and frequency, whether the connection of the power grid is normal.
F36	Reserved	
F37	Reserved	
F38	Reserved	
F39	INT_AC_OverCurr_Fault	Inverter AC overcurrent, restart the inverter.
F40	INT_DC_OverCurr_Fault	Inverter DC overcurrent, restart the inverter.
F41	Parallel_system_Stop	Check the hybrid inverter working status. If there's 1pcs hybrid inverter is in OFF status, the other hybrid inverters may report F41 fault in parallel system.
F42	Parallel_Version_Fault	1. Check whether the inverter version is consistent. 2. Please contact us to upgrade the software version.
F43	Reserved	
F44	Reserved	
F45	AC_UV_OverVolt_Fault	Grid voltage out of range 1. Check the voltage is in the range of specification or not. 2. Check whether AC cables are firmly and correctly connected
F46	AC_UV_UnderVolt_Fault	Grid voltage out of range 1. Check the voltage is in the range of specification or not. 2. Check whether AC cables are firmly and correctly connected.
F47	AC_OverFreq_Fault	Grid frequency out of range 1. Check the frequency is in the range of specification or not. 2. Check whether AC cables are firmly and correctly connected.

Error Code	Description	Solutions
F48	AC_UnderFreq_Fault	Grid frequency out of range 1. Check the frequency is in the range of specification or not. 2. Check whether AC cables are firmly and correctly connected.
F49	AC_U_GridCurr_DcHigh_Fault	Restart the inverter 3 times and restore the factory settings.
F50	AC_V_GridCurr_DcHigh_Fault	Restart the inverter 3 times and restore the factory settings.
F51	Battery_Temp_High_Fault	Check wether the temperature data of BMS is too high.
F52	DC_VoltHigh_Fault	BUS voltage is too high 1. Check whether battery voltage is too high. 2. Check the PV input voltage, make sure it is within the allowed range.
F53	DC_VoltLow_Fault	BUS voltage is too low 1. Check whether battery voltage is too low. 2. If the battery voltage is too low, using PV or grid to charge the battery.
F54	BAT2_VoltHigh_Fault	1. Check the battery 2 terminal voltage is high. 2. Restart the inverter 2 times and restore the factory settings.
F55	BAT1_VoltHigh_Fault	1. Check the battery 1 terminal voltage is high. 2. Restart the inverter 2 times and restore the factory settings.
F56	BAT1_VoltLow_Fault	1. Check the battery 1 terminal voltage is low. 2. Restart the inverter 2 times and restore the factory settings.
F57	BAT2_VoltLow_Fault	1. Check the battery 2 terminal voltage is low. 2. Restart the inverter 2 times and restore the factory settings.
F58	Battery_comm_Lose	1. It tells the communication between hybrid inverter and battery BMS disconnected when “BMS_Err-Stop” is active”. 2. If don’t want to see this happen, you can disable “BMS_Err-Stop” item on the LCD.
F59	Reserved	
F60	GEN_FAULT	Check whether the voltage and frequency of the generator are normal, and then restart.
F61	INVERTER_Manual_OFF	Check whether the switch of the inverter is turned on, restart the inverter, and restore the factory settings.
F62	DRMs0_stop	Check the DRM function is active or not.
F63	ARC_Fault	1. ARC fault detection is only for US market. 2. Check PV module cable connection and clear the fault.
F64	Heat sink high-temperature failure	Heat Sink temp is too high 1. Check if the working environment temperature is too high. 2. Turn off the inverter for 30 minutes and restart.

COMMISSIONING

Start-Up / Shutdown Procedure

The inverter must be installed by a qualified / licensed electrical engineer in accordance with the country's wiring regulations.

Before switching on, the installation engineer must have completed the Earth Bond, RCD and earth leakage tests, checked that the solar panel Voc voltage does not exceed 850V and checked the battery voltage.

Power ON Sequence:

1. Switch on AC
2. Press Start Button
3. Switch on Battery and battery breaker
4. Switch on the DC (PV Isolator)

Shutdown Sequence:

1. Switch off AC
2. Press the start button
3. Switch off the battery and the battery breaker
4. Switch off the DC (PV isolator)

Inverter Commissioning Info

After you have successfully powered up the inverter, it must be programmed and set up as per the programming feature above.

Solar	Check each bond on the solar panels	Check the VOC does not exceed 850V	Ensure both MPPTs are balanced
GRID	Measure the supply voltage check it matches the settings of the inverter	If it falls out of the setting range it will cause the inverse shut down and alarm	See Grid Setup page
BATTERY	Check the battery charge and discharge is within the C rating of the battery. Too high will damage the battery		Check the battery BMS is communicating with the inverter

SYSTEM MODE	This is the heart of the system this controlls everything	Ensure you are familiar with this, if you fully understand the controller you will fully appreciate the capabilities of there inverter	See section 'Program Charge / Discharge Times'
ADVANCE	This is for paralleling systems, and wind turbine	If paralleling inverters in 3 Phase check your phase rotation before switching on the AC Load, in 3 Phase the output voltage will increase across phase to 400V	If using a wind turbine please ensure you have the correct limiting resistor, caps and rectifier
FAULT CODES	Familiarize yourself with common fault codes		

GDFI Fault

Before the inverter connects to the Grid, it will detect the impedance (effective resistance) of the solar PV + to Ground, and the impedance of the solar PV - to ground. If any of the impedance values are less than 33kΩ, the inverter will not connect to the Grid and will report an error F24 on its LCD.

MAINTENANCE

The inverter is low maintenance. However, it is important that at least twice a year (for dusty environments this may need to be carried out weekly) all the cooling fans, air ducts are cleaned and dust free.

Check if there are no fault codes and Lithium battery communication is correct.

Weekly cleaning statement: Suggest micromesh filters as an available option, micro ants here are a real problem.

APPENDIX A

Definition of RJ45 Ports

No.	Color	BMS1	BMS2	Meter	RS485	DRM
1	Orange&White	485_B	485_B	Meter-485_B	Modbus-485_B	DRM1/5
2	Orange	485_A	485_A	Meter-485_A	Modbus-485_A	DRM2/6
3	Green&White	GND_485	GND_485	GND_COM	GND_485	DRM3/7
4	Blue	CAN_H1	CAN_H2	Meter-485_B	-	DRM4/8
5	Blue&White	CAN_L1	CAN_L2	Meter-485_A	-	REF-GEN/0
6	Green	GND_485	GND_485	GND_COM	GND_485	GND_LCD
7	Brown&White	485_A	485_A	-	Modbus-485_A	NetJ1_7
8	Brown	485_B	485_B	-	Modbus-485_B	NetJ1_7

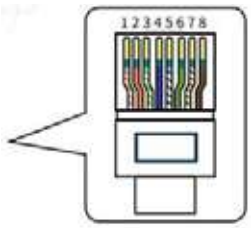

RS232

No.	WIFI/RS232
1	
2	TX
3	RX
4	
5	D-GND
6	
7	
8	
9	12Vdc

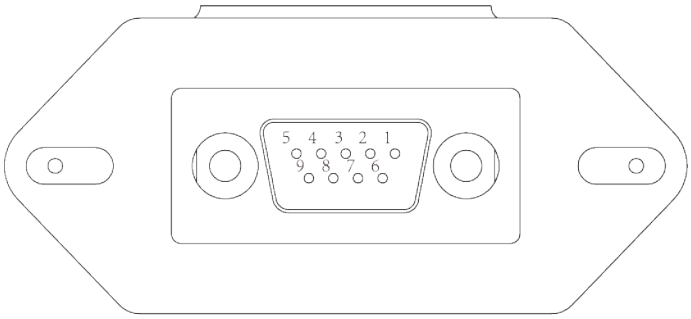

WIFI/RS232

This RS232 port is used to connect the wifi datalogger

APPENDIX B

- Split Core Current Transformer (CT) dimension: (mm).
- Secondary output cable length is 4m.

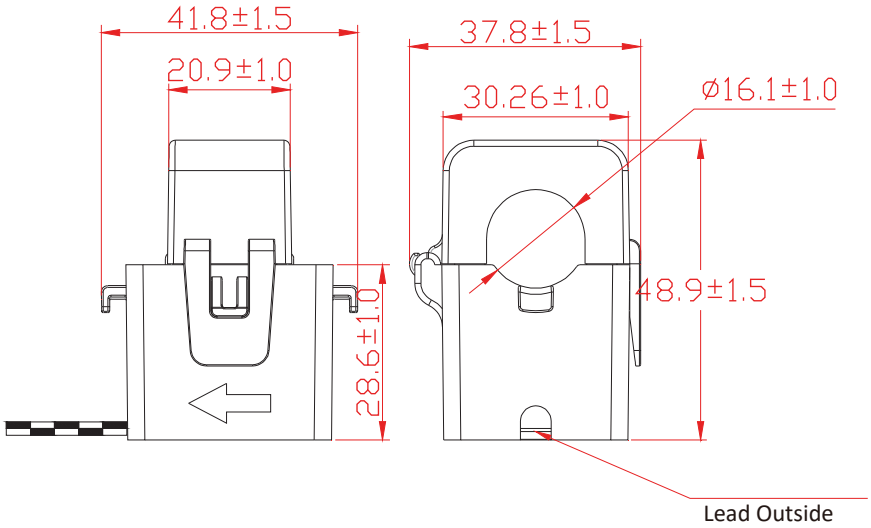

For more information, training videos, software upgrades, help line, forum please refer to http://www.sunsynk.com - Tech Support (Do not forget to register first on the website).

Sunsynk @energysolutions sunsynkofficial

SUN SYNK®

CONTACT US

Call us: +44 151 832 4300 **Email us:** sales@sunsynk.com

HK Address: Room 702-704, 7/F Texwood Plaza, 6 How Ming Street, Kwun Tong, Kowloon, Hong Kong.

UK Address: Sunsynk UK Ltd, 17 Turnstone Business Park, Mulberry Avenue, Widnes, Cheshire, WA8 0WN.

SA Address: Globaltech Sunsynk South Africa (Pty) Ltd, Unit 2 Highview Boulevard, Ferndale 2194.

NL Address: Sunsynk NL BV, Henri Wijnmalenweg 8, 5657 EP Eindhoven, Netherlands.

GlobalTech Ltd ena energynetworks association Approved SGS UK CA CE Powered by SUN SYNK