LiFePO4 Battery System for Households

358-010343-00A

felicitysolar®

Make life full of hope

USER GUIDE

LiFePO4 Battery System for Households

Low voltage energy storage lithium battery pack

Contents

1 ABOUT THIS MANUAL 1
1.1 Purpose 1
1.2 Scope 1
1.3 Safety Instructions 1
1.4 Can be Connected in Parallel 1
2 INTRODUCTION 2
2.1 Features 2
2.2 Product Overview 2
2.3 Specifications 4
2.4 Recommended Settings 4
3. INSTALLATION 5
3.1 Unpacking and Inspection 5
3.2 Tools 7
3.3 Floor Installation with Base 7
3.4 Installation Environment 8
3.5 Product size information 8
4. INSTALLATION 10
4.1 Unpacking and Inspection 10
4.2 Mounting the Unit 10
4.3 Connection for Parallel Mode 10
5. OPERATION 12
5.1 Switch On / Off 12
5.2 Description for LED 12
5.3 ON / OFF or SOC Led (Mode or SOC) 13
6. LCD Display Icons 13
6.1 BMS Information Page 14
6.2 Fault Code Table 15
6.3 DIPswitch SW1-SW4 Description 16
7. EMERGENCY SITUATIONS 17
7.1 Fire 17
7.2 Leaking Batteries 17
7.3 Wet Batteries 17
7.4 Damaged Batteries 17
7.5 Warranty 17

1 ABOUT THIS MANUAL

1.1 Purpose

This manual describes the introduction, installation, operation and emergency situations of the battery bank. Please read this manual carefully before installations and operations. Keep this manual for future reference.

1.2 Scope

This manual provides safety and installation guidelines as well as information on tools and wiring.

1.3 Safety Instructions

WARNING: This chapter contains important safety and operating instructions. Read and keep this manual for future reference.

1.Before using the unit, read all instructions and cautionary markings on the unit, the batteries and all appropriate sections of this manual.
2. CAUTION –-- To reduce risk of injury,damage,even burst. please use it following using manual. In case of causing personal
3. Do not disassemble the battery. Take it to a qualified service center when service or repair is required. Incorrect re-assembly may result in a risk of fire.
4. To reduce risk of electric shock, disconnect all wirings before attempting any maintenance or cleaning. Turning off the unit will not reduce this risk.
5. CAUTION – Only qualified personnel can install this device with inverter.
6. For optimum operation of this battery, please follow required spec to select appropriate cable size.
7. Be very cautious when working with metal tools on or around batteries. A potential risk exists to drop a tool to spark or short circuit batteries or other electrical parts and could cause an explosion or fire.
8. Please strictly follow installation procedure.
9. To support full output load, at least 2 sets of FLS 48V for inverter larger than 6KVA in parallel connection.
10. **GROUNDING INSTRUCTIONS** - This System should be connected to a permanent grounded wiring system. Be sure to comply with local requirements.
11. NEVER cause AC output and DC input short circuited. Do not connect to the mains when DC input short circuits.
12. Warning!! Only qualified service persons are able to service this device.
13. Battery should be installed indoor and kept away from water, high temperature mechanical force and flames.
14. Do not install the battery in any environment of temperature below 0°C or over 55°C,and humidity over 80%.
15. Do not put any heavy objects on the battery.

1.4 Can be Connected in Parallel

1. The batteries can be connected in parallel. Series connection is not allowed. Use in upright position only.
2. The batteries are not allowed to connected with PWM controller for charging.

Special Attention: Due to the built-in protection board of the lithium battery pack is with over-discharge protection function, it is strongly recommended to stop using the load when the battery pack is over-discharged. The battery pack cannot be repeatedly activated for discharge. Or the battery may be failed to be activated by the AC or PV activation cable (It requires a special charging activation method), so cannot be charged. Therefore, when the battery pack is low power, please charge the battery as soon as possible when main power or solar energy is available.

2. INTRODUCTION

The battery system main using solar power system for family house. It also have a with to controller the battery easily and protect our Household application timely.

2.1 Features

Features:
•LiFePO4:Higher safe performance and longer cycle life.
•Multiple Protection:Built-in smart BMS, Breaker and Fuse.
•Flexible Installation:Movalbe type Floor-Mounted.
•Wide Compatibility:Compatible with leading inverter brands.
•High Scalability:Capacity up to 42.5kWh.
•Long Warranty:10 Years.

2.2 Product Overview

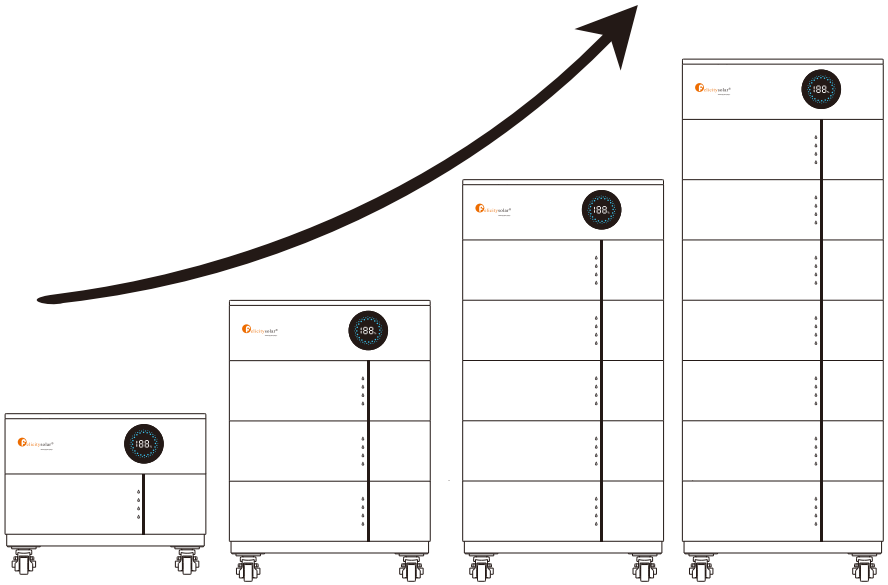

Up to 8 PCS battery packs can be connected in series

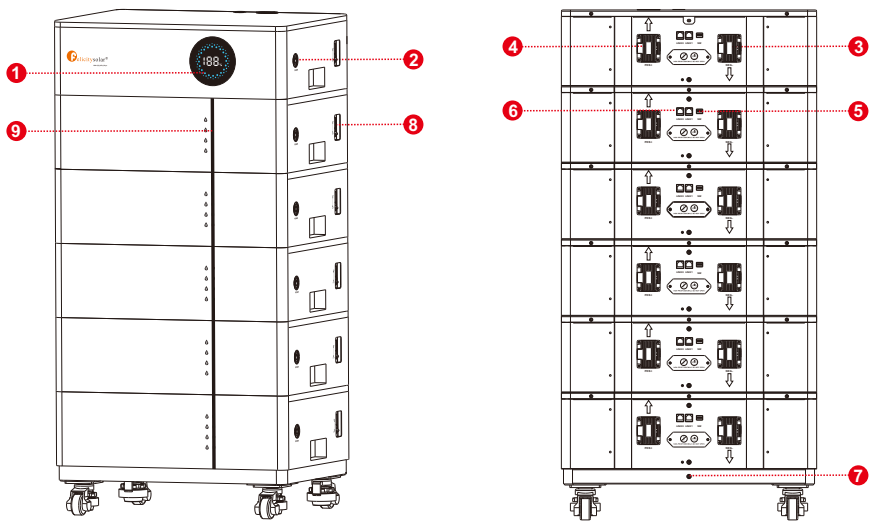

1. LCD display
2. Power On/Charging indicator
3.Battery Negative -
4. Battery Positive +
5. Switch
6. Communication port
7.Earth wire
8. Breaker
9. LED

9. Fuse(Non professionals are not allowed to open this cover)

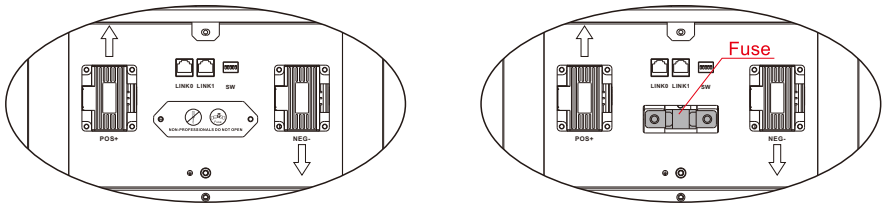

If the fuse is burnt out, please open the cover and replace it

2.3 Specifications

Model	FLS48100							
Number of Battery Modules	1	2	3	4	5	6	7	8
Capacity	5.3kWh	10.6kWh	15.9kWh	21.2kWh	26.6kWh	31.9kWh	37.2kWh	42.5kWh
Battery Type	LiFePO4							
Nominal Voltage	51.2V							
Operating Voltage	44.8-57.6V							
Recommend Charge/Discharge Current[1]	≤60A	≤120A	≤180A	≤240A	≤300A	≤360A	≤400A	≤400A
Recommend Charge/Discharge Power[1]	≤3,000W	≤6,000W	≤9,000W	≤12,000W	≤15,000W	≤18,000W	≤20,000W	≤20,000W
Maximum Charge/Discharge Current(15s)	100A	200A	300A	400A	500A	600A	700A	800A
Maximum Charge/Discharge Power(15s)	5,000W	10,000W	15,000W	20,000W	25,000W	≤30,000W	≤35,000W	≤40,000W
Depth of Discharge(DOD)	≥95%							
Scalability	Up to 8 units in parallel(42.5kwh)							
Communication	RS485 / CAN							
Protection Level	IP21							
Cycle Life[2]	≥ 6000 Cycles							
Charging Temperature Range	0-55 °C							
Discharging Temperature Range	-20-55 °C							
Display	LCD+LED							
Installation	Floor-Mounted							
Protection	Built-in smart BMS, Breaker, Fuse							
Warranty	10 Years							
Net Weight	53kg	99kg	145kg	191kg	237kg	283kg	329kg	375kg
Gross Weight	60kg	110kg	160kg	210kg	260kg	310kg	360kg	410kg
Product Dimension	600*450*(180N+120)mm							
Main control outer packaging size	712*562*333mm							
Control outer packaging size	712*562*298mm							
[1] Recommend charge/discharge current/power is affected by temperature and SOC.								
[2] Test conditions: 0.2C Charging/Discharging @25°C , 80% DOD.								

2.4 Recommended Settings

Lithium battery pack is not same as lead-acid battery, so for the devices which you connect with the battery pack for charging or discharging, such as inverters, MPPT charger controllers or UPS, please implement pre-settings as recommended settings as below before you launched them.

Setting	FLS48100
Max. Charging Voltage	57.6V
Floating charging Voltage	57.6V
Max. Charging Current	60A*N
Cut-off voltage	48V

Notes:"N"means the number of battery packs connected parallel and should not exceed 8.(N≤8)

3. Installation Procedure

3.1 Setup Script

Step 1: Open the packaging wooden box and remove the accessories (accessory box, base, casters 4PCS);

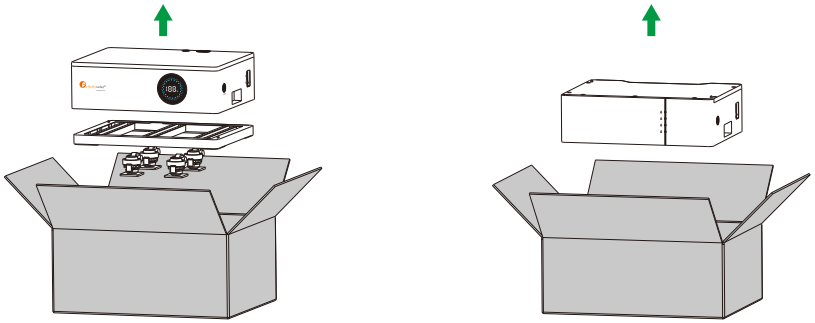

Step 2: Fix the 4 casters on the base using M6X16 screws

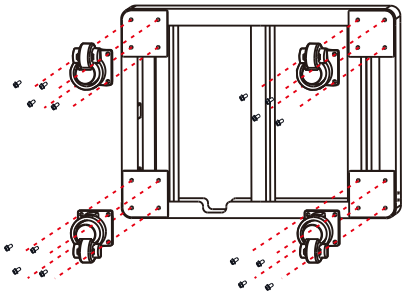

Step 3: Maintain a distance of 35mm from the base wall, use wall mounted positioning cardboard, and mark the holes layer by layer

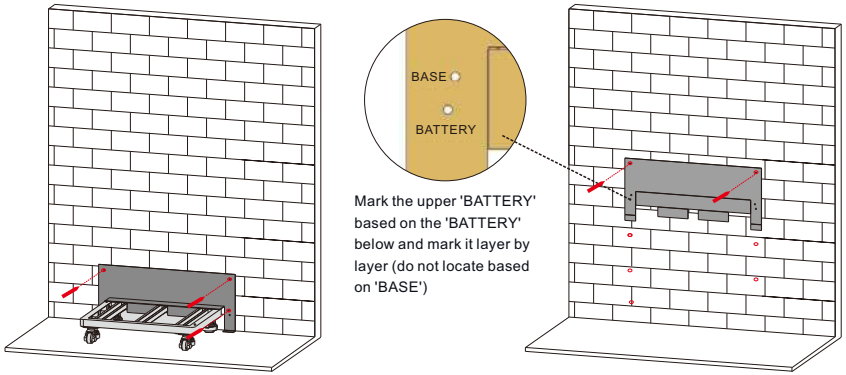

Step 4: Drill holes according to the position marked on the installation hole position cardboard (note: the hole diameter is 10mm, and the drilling depth is 60mm)

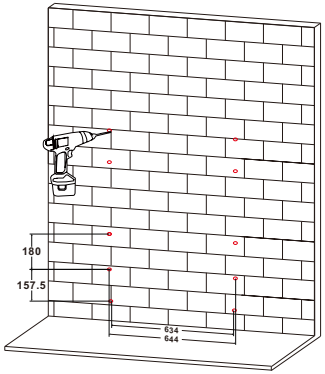

Step 5: Stack and place the products, with a base on the bottom layer, LED lights on the middle layer, and an LCD display screen on the top layer

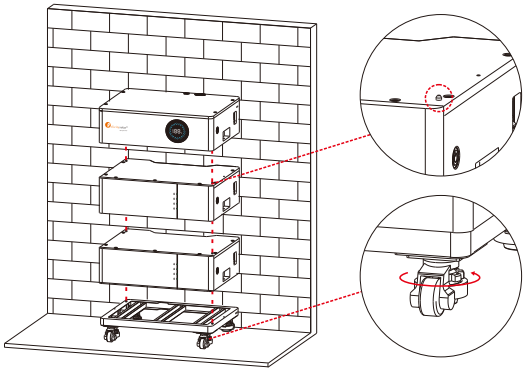

There are positioning pins between layers for guidance, please do not use force to damage them

Attention: The rotation operation can adjust the height

Step 6: Use sheet metal lock wall components to fix the product on the wall

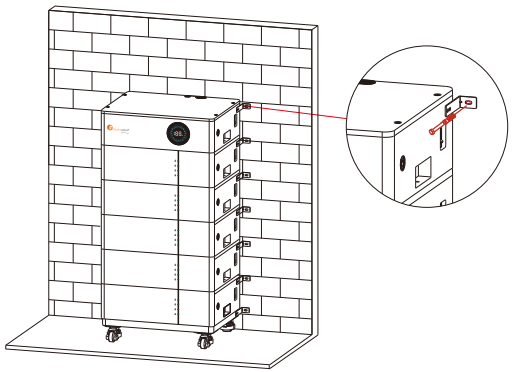

The battery packaging layer is fixed between the layers using hexagonal screws (at the handle)

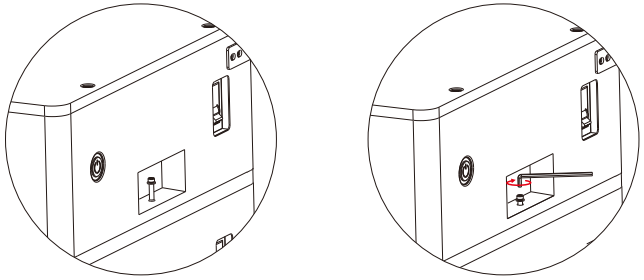

3.2 Tools

Screw Driver

Crimping Modular

Safety Shoes

Multimeter

Safety Gloves

Safety Goggles

Plier

Ribbon

Electric drill

3.3 Floor Installation with Base

Installation Location Requirements

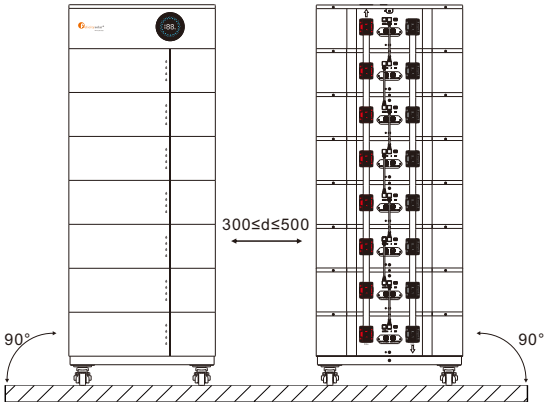

Ground(Two rows installtion)

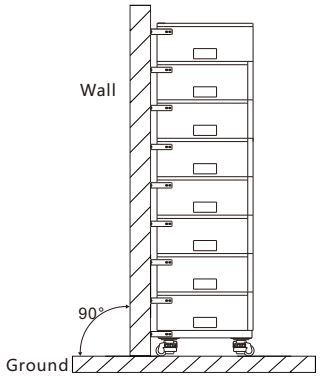

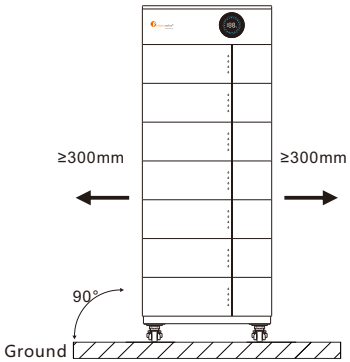

3.4 Installation Environment

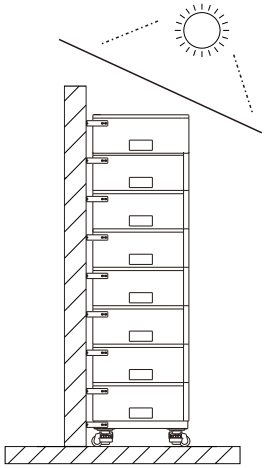

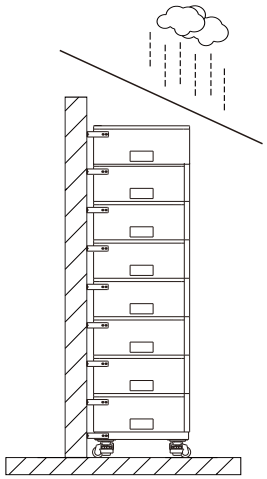

Max.+55°C

Min.-20°C

RH.+5%~+95%

3.5 Product size information

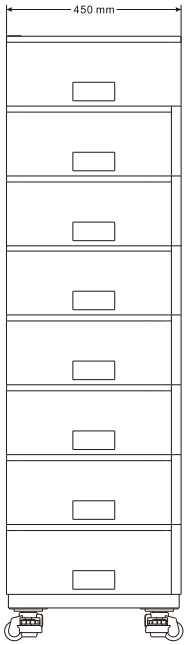

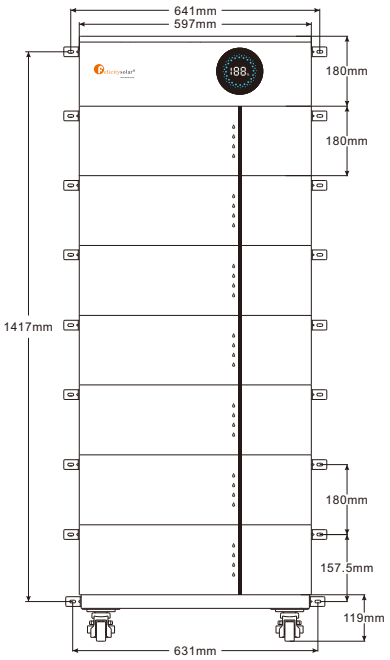

4. INSTALLATION

4.1 Unpacking and Inspection

Before installation, please inspect the unit. Be sure that nothing inside the package is damaged. You should have received the following items inside of package.

FLS48100-C		
CAN com line x1 RS485 com line x1	Communication line x1	Cables x2
User manual x1	Guarantee card x1	Universal wrench x1

Castor x4	Base x1	Lock wall components x2
CAN/485 com line x1	Grounding wire x1	Plastic expansion nail x4

FLS48100-M		
Lock wall components x2	Series communication line x1	Series connection soft copper busbar x2
Lock wall components x2	Guarantee card x1	Plastic expansion nail x2

4.2 Mounting the Unit

Consider the following points before selecting where to install:

- Do not mount the battery on flammable construction materials.
- The ambient temperature should be between 0°C and 45°C to ensure optimal operation.
- The recommended installation position is to be adhered to the wall vertically.
- Be sure to keep other objects and surfaces as shown in the right diagram to guarantee sufficient heat dissipation and to have enough space for removing wires.

Please follow below steps to implement battery connection:

1.Assemble battery ring terminal based on recommended battery cable and terminal size.

2.Connect all battery packs as units requires. It's suggested to connect at least 2 sets of FLS 48V for inverter larger than 6KVA in parallel connection.

Note: if you need the battery wake-up when the grid back, connect the battery with grid use power adapter and communication line 1 shown in the package list.

4.3 Connection for Parallel Mode

The FLS series battery support to be connected in parallel for expansion. If you need one more battery bank work in parallel mode, connect the battery as shown in PIC 1.

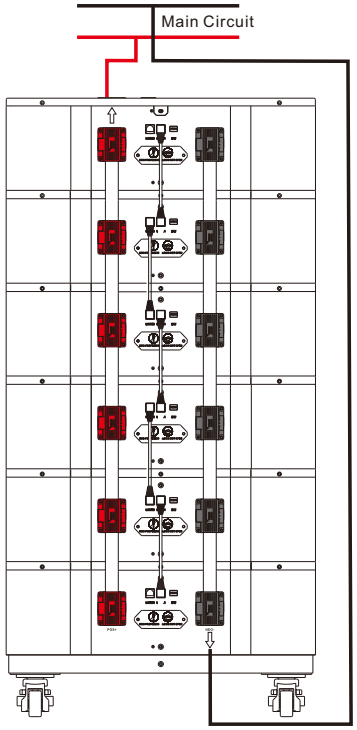

Step 1: The schematic diagram of the parallel connection of three battery packs is shown in Figure 1. In order to maintain the current balance of the battery pack, please ensure that the negative electrode of the battery comes out from the bottom

Note: After completing the above steps, arbitrarily select the positive and negative poles of one of the battery packs to output. After confirming the correct connection of the inverter, controller and battery, you can turn on any of the switches and use the battery group happily.

For pure off grid system ,the PV awake wire need to be connected with MPPT charge controller if the battery pack is charged by solar panels only . The connection diagram as below :

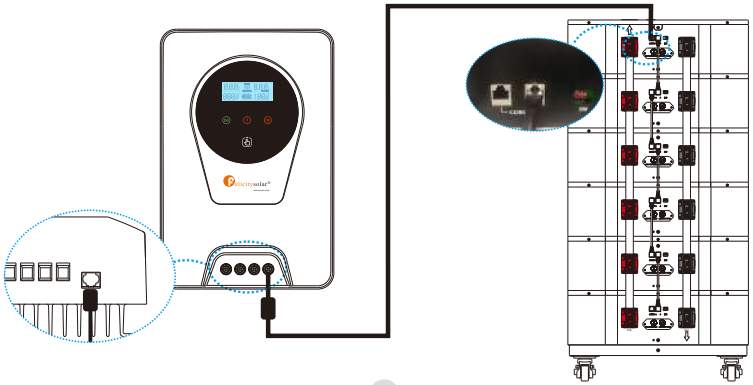

5. OPERATION

Once the batteries are connected well, close the breaker to the ON block, press On/Off button to enable the output of the battery pack.

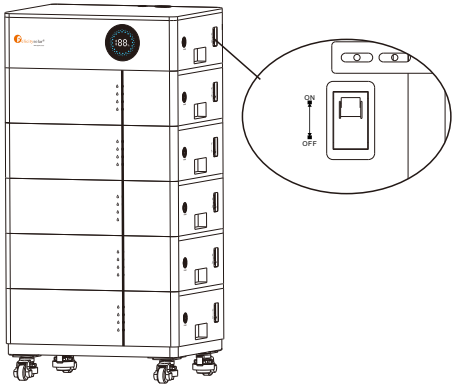

5.1 Switch On / Off

1.Switch on: press On/Off button to switch on the battery, then the battery will do self-inspection before enable output. The LCD will show the SOC.

2.Switch off: press and hold On/Off button for 1to3 seconds, the battery will shut down directly.

Description for Communication port

Picture	PIN	Description
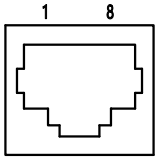	1	Trigger-GND
	2	Trigger-VCC
	3	CANL-PCS
	4	CANH-PCS
	5	RS485-B
	6	RS485-A
	7	CANL
	8	CANH

DIP SWITCH		
	1-4	Communication Address
	5	Termination Resister

5.2 Description for LED

The LED shows the SOC of module N.

100%	75%	50%	25%	Flashing SOC<10%

Note: The battery need to be fully charged for at least once in one month to ensure the accurate SOC calculation.

5.3 ON / OFF or SOC Led (Mode or SOC)

BATTERY MODE	ON /OFF		SOC				REMARK
	GREEN LED	RED LED	LED1	LED2	LED3	LED4	
POWER OFF	OFF	OFF	OFF	OFF	OFF	OFF	
POWER ON	OFF	ON	ON	ON	ON	ON	
STANDBY	OFF	OFF	SOC				SOC <10%(DEFAULT): LED1 FLASH
NORMAL	ON	OFF	RUNNING /SOC				SOC <10%(DEFAULT): LED1 FLASH
DISCHARGE	ON	OFF	SOC				SOC <10%(DEFAULT): LED1 FLASH
CHARGE	FLASH	OFF	RUNNING				
LOW POWER	FLASH	OFF	OFF				
FAULT	OFF	ON	ON	OFF	OFF	OFF	BATTERY VOLTAGE HIGH
			OFF	ON	OFF	OFF	BATTERY VOLTAGE LOW
			ON	ON	OFF	OFF	CELL VOLTAGE HIGH
			OFF	OFF	ON	OFF	CELL VOLTAGE LOW
			ON	OFF	ON	OFF	CHARGING CURRENT HIGH
			OFF	ON	ON	OFF	DISCHARGING CURRENT HIGH
			ON	ON	ON	OFF	BMS TEMPERATURE HIGH
			OFF	OFF	OFF	ON	BMS TEMPERATURE LOW
			ON	OFF	OFF	ON	CELL TEMPERATURE HIGH
			OFF	ON	OFF	ON	CELL TEMPERATURE LOW
			ON	ON	OFF	ON	CURRENT SENSOR ABNOMAL

6. LCD Display Icons

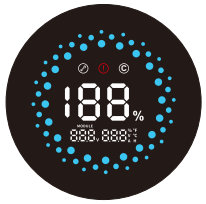

Icon	Function Description
Display Information	
MODULE 888 V 888 % °F V °C A H	Indicates the voltage, current, temperature, SOC of the module. (Short press the button to display the information of each parallel module.)
188 %	Indicates SOC
	Indicates battery level, each LED represents 5%. (When charging, this icon flashes; when discharging, the icon displays constant)
	Indicates settings.
	Indicates a fault.
	Indicates communication signs.

6.1 BMS Information Page

The basic information will be displayed in turn after power on.

BMS power on information

BMS information is all on.

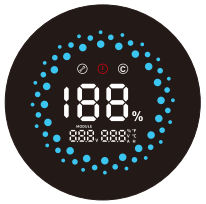

BMS version

Eg:“516"is the software version ,”500”is the IAP version and temporary version.

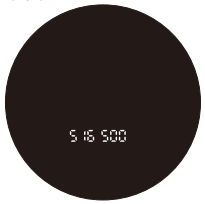

BMS type

Eg: Rated voltage is "48V", model is "100AH".

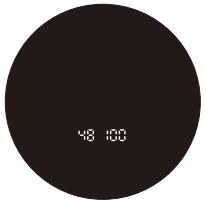

BMS data

This interface indicates that it is in SOC calibration.

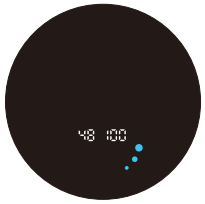

BMS data

Eg: "70%" refer to battery SOC, "C" indicates that the battery is charging, and if it is discharging, "d" is displayed.
"2" indicates that the data currently displayed is for module 2, "65%" represents the SOC of module 2.
Short press the button to display the information of each parallel module

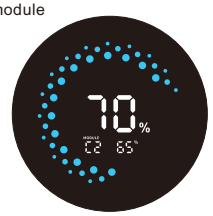

BMS data

Eg: "70%" refer to battery SOC,”52.0V” refer to battery voltage,”35A” refer to battery current.
Short press the button to display the information of each parallel module

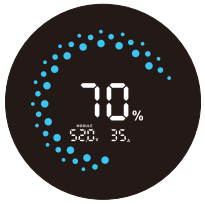

BMS fault code / flag

Eg:"52.0V" /"C09" /"70%" are battery voltage, fault code and SOC respectively, and Fault icon constant

6.2 Fault Code Table

Fault Code	Fault information	Trouble Shooting
C01	Battery overvoltage	Restart the unit, if the error happens again, please return to repair center.
C02	Battery undervoltage	Restart the unit, if the error happens again, please return to repair center.
C03	Cell overvoltage	Restart the unit, if the error happens again, please return to repair center.
C04	Cell undervoltage	Restart the unit, if the error happens again, please return to repair center.
C05	Charge overcurrent	Restart the unit, if the error happens again, please return to repair center.
C06	Discharge overcurrent	Restart the unit, if the error happens again, please return to repair center.
C07	MOS overtemperature	1 .The inner temperature is over the limitation. 2. Check whether theambient temperature is too high.
C07	MOS overtemperature	1 .The inner temperature is over the limitation. 2. Check whether theambient temperature is too high.
C08	MOS undertemperature	1. The internal temperature is lower than the limit range. 2. Check whether the ambient temperature is too low.
C09	Cell overtemperature	Restart the unit, if the error happens again, please return to repair center.
C10	Cell undertemperature	Restart the unit, if the error happens again, please return to repair center.
C11	Abnormal current sampling	Restart the unit, if the error happens again, please return to repair center.
C12	Abnormal output impedance	Restart the unit, if the error happens again, please return to repair center.
C13	Parallel failed	1. Please check if single unit is installed to parallel system. 2. If this error happens during parallel installation, please check wires connectiotn. If they are connected correctly, please funish parallel installation first, and t hen Restart the unit. 3. If the problem remains, please contact your installer.
C14	Output loss	1. Please check whether the circuit breaker is closed; 2. Please check whether the fuse is normal; 3. Restart the unit, If the error happens again, please return to repair center.

6.3 DIP switch SW1-SW4 Description

DIP switch SW1-SW4 Description ①						
Sw1	SW2	SW3	SW4	Remarks	DIP switch SW5 Description②	
0	0	0	0	means ID=0,communication address is0x00/0x10③	SW5	Remarks
1	0	0	0	means ID=1,communication address is0x01④	1	means connect 120Ω resistor
0	1	0	0	means ID=2,communication address is0x02		
1	1	0	0	means ID=3,communication address is0x03	0	means disconnect 120Ω resistor
0	0	1	0	means ID=4,communication address is0x04		
1	0	1	0	means ID=5,communication address is0x05		
0	1	1	0	means ID=6,communication address is0x06		
1	1	1	0	means ID=7,communication address is0x07		
0	0	0	1	means ID=8,communication address is0x08		
1	0	0	1	means ID=9,communication address is0x09		
0	1	0	1	means ID=10,communication address is0x0A		
1	1	0	1	means ID=11,communication address is0x0B		
0	0	1	1	means ID=12,communication address is0x0C		
1	0	1	1	means ID=13,communication address is0x0D		
0	1	1	1	means ID=14,communication address is0x0E		
1	1	1	1	means ID=15,communication address is0x0F		
Remark①: 1 in SW1-SW5 indicates ON status, and 0 indicates OFF status.						
Remark②: When multiple battery packs communicate, the last battery pack SW5 needs to be in the ON status, otherwise the communication may have interference.						
Remark③: When the battery pack ID is set to 0, it means stand-alone operation, and it is not necessary to detect whether the parallel condition is satisfied ⑤						
Remark④: When the battery pack ID is set to 1-15, it means that the parallel operation is required, and it is necessary to detect whether the parallel condition is satisfied ⑤						
Remark⑤: The parallel condition is that the difference between the battery voltage of the local battery and all the battery pack voltages is <3V, otherwise wait until the condition is satisfied						

7. EMERGENCY SITUATIONS

Felicity cannot guarantee battery absolute safety.

7.1 Fire

In case of fires, make sure that the following equipment is available near the system.

- SCBA (self-contained breathing apparatus) and protective gear in compliance with the Directive on Personal Protective Equipment 89/686/EEC.
- NOVEC 1230, FM-200, or dioxide extinguisher

Batteries may explode when heated above 150°C. KEEP FAR AWAY from the battery if it catches fire.

7.2 Leaking Batteries

If the battery pack leaks electrolyte, avoid contact with the leaking liquid or gas. If one is exposed the leaked substance, immediately perform the cations described below.

- Inhalation: Evacuate the contaminated area, and seek medical attention.
- Contact with eyes: Rinse eyes with running water for 5 minutes, and seek medical attention.
- Contact with skin: Wash the affected area thoroughly with soap and water, and seek medical attention.
- Ingestion: Induce vomiting, and seek medical attention.

7.3 Wet Batteries

If the battery pack is wet or submerged in water, do not let people access it, and contact your supplier for help.

7.4 Damaged Batteries

Damaged batteries are not fit for use and are dangerous and must be handled with the utmost care. It may leak electrolyte or produce flammable gas. If the battery pack seems to be damaged, pack it in its original container, and then return it to your supplier.

7.5 Warranty

Products that are operated strictly in accordance with the user manual are covered by the warranty. Any violation of this manual may void the warranty.

Limitation of Liability

Any product damage or property loss caused by the following conditions, Felicity does not assume any direct or indirect liability.

- Product modified, design changed or parts replaced.
- Changed, or attempted repairs and erasing of series number or seals;
- System design and installation are not in compliance with standards and regulations;
- The product has been improperly stored in end user’s premises;
- Transport damage (including painting scratch caused by movement inside packaging during shipping). A claim should be made directly to shipping or insurance company.