SolaX Power Network Technology(Zhe jiang) Co., Ltd.

No.288 Shizhu Road, Tonglu Economic Development Zone,
Tonglu City, Zhejiang Province, China.
Tel: +86 0571-56260011
E-mail: info@solaxpower.com

614.00364.03

X3-Hybrid Series

User Manual

5.0kw - 10.0kw

EN

Copyright Declaration

The copyright of this manual belongs to SolaX Power Network Technology(Zhe jiang) Co., Ltd.. Any corporation or individual should not plagiarize, partially or fully copy (including software,etc.), and no reproduction or distribution of it in any form or by any means. All rights reserved. SolaX Power Network Technology (Zhe jiang) Co.,Ltd. . reserves the right of final interpretation.

www.solaxpower.com

Contents

1. Note on this Manual 03

1.1 Scope of Validity 03
1.2 Target Group 03
1.3 Symbols Used 03

2. Safety 04

2.1 Important Safety Instructions 04
2.2 Explanation of Symbols 08
2.3 CE Directives 09

3. Introduction 10

3.1 Basic Features 10
3.2 Work Modes 12
3.3 Dimension 13
3.4 Terminals of PV Inverter 14

4. Technical Data 15

4.1 DC input (apply to version E, C) 15
4.2 AC output/input (apply to version E, C) 15
4.3 Internal Charger (apply to version E, C) 16
4.4 Efficiency, Safety and Protection (apply to version E, C) 16
4.5 EPS output (apply to version E only) 17
4.6 General Data 17

5. Installation 18

5.1 Check for Physical Damage 18
5.2 Packing List 18
5.3 Mounting 19

6. Electrical Connection 22

6.1 PV Connection 22
6.2 Grid Connection 24
6.3 EPS Connection (apply to E Version) 26
6.4 On grid Parallel Connection 30

6.5 Battery Connection 34
6.6 Earth Connection(mandatory) 39
6.7 Meter Connection 40
6.8 LAN Connection 43
6.9 DRM Connection 44
6.10 Monitoring Connection(optional) 45
6.11 Inverter Manipulation 46

7. Firmware Upgrading 48

8. Setting 50
8.1 Control Panel 50
8.2 Menu Structure 51
8.3 LCD Operation 53

9. Troubleshooting 74
9.1 Trouble Shooting 74
9.2 Routine Maintenance 78

10. Decommissioning 79
10.1 Dismantling the Inverter 79
10.2 Packaging 79
10.3 Storage and Transportation 79

11 Disclaimer 80

1 Notes on this Manual

1.1 Scope of Validity

This manual is an integral part of X3-Hybrid, It describes the assembly, installation, commissioning, maintenance and failure of the product. Please read it carefully before operating.

X3-Hybrid-5.0-N-E	X3-Hybrid-6.0-N-E	X3-Hybrid-8.0-N-E	X3-Hybrid-10.0-N-E
X3-Hybrid-5.0-D-E	X3-Hybrid-6.0-D-E	X3-Hybrid-8.0-D-E	X3-Hybrid-10.0-D-E
X3-Hybrid-5.0-N-C	X3-Hybrid-6.0-N-C	X3-Hybrid-8.0-N-C	X3-Hybrid-10.0-N-C
X3-Hybrid-5.0-D-C	X3-Hybrid-6.0-D-C	X3-Hybrid-8.0-D-C	X3-Hybrid-10.0-D-C

Note: **"5.0"** means 5.0kW.
"D" means with "DC Switch", **"N"** means without "DC Switch".
"E" means "EPS function" will be available with an external changeover device installed.
"C" means without"EPS function".
Store this manual where it will be accessible at all times.

1.2 Target Group

This manual is for qualified electricians. The tasks described in this manual only can be performed by qualified electricians.

1.3 Symbols Used

The following types of safety instructions and general information appear in this document as described below:

Danger
"Danger" indicates a hazardous situation which, if not avoided, will result in death or serious injury.

Warning!
"Warning" indicates a hazardous situation which, if not avoided, could result in death or serious injury.

Caution
"Caution" indicates a hazardous situation which, if not avoided, could result in minor or moderate injury.

Note
"Note" provides tips that are valuable for the optimal operation of our product.

2 Safety

2.1 Important Safety Instructions

Danger!
Danger to life due to high voltages in the inverter!
- All work must be carried out by qualified electrician.
- The appliance is not to be used by children or persons with reduced physical sensory or mental capabilities, or lack of experience and knowledge, unless they have been given supervision or instruction.
- Children should be supervised to ensure that they do not play with the appliance.

Caution!
Danger of burn injuries due to hot enclosure parts!
- During operation, the upper lid of the enclosure and the enclosure body may become hot.
- Only touch the lower enclosure lid during operation.

Caution!
Possible damage to health as a result of the effects of radiation!
- Do not stay closer than 20 cm to inverter for any length of time.

Note!
Grounding the PV generator.
- Comply with the local requirements for grounding the PV modules and the PV generator. It is recommends connecting the generator frame and other electrically conductive surfaces in a manner which ensures continuous conduction and ground these in order to have optimal protection of system and persons.

Warning!
- Ensure input DC voltage/current ≤Max. DC voltage/current .Over voltage/current may cause permanent damage to inverter or other losses, which will not be included in warranty

Warning
- Authorized service personnel must disconnect both AC and DC power from inverter before attempting any maintenance or cleaning or working on any circuits connected to inverter.

WARNING !
Do not operate the inverter when the device is running.

WARNING !
Risk of electric shock!

- Prior to the application, please read this section carefully to ensure correct and safe application. Please keep the user manual properly.
- Accesories only together with the inverter shipment are recommanded here. Otherwise may result in a risk of fire, electric shock, or injury to person.
- Make sure that existing wiring is in good condition and that wire is not undersized.
- Do not disassemble any parts of inverter which are not mentioned in installation guide. It contains no user-serviceable parts. See Warranty for instructions on obtaining service. Attempting to service the inverter yourself may result in a risk of electric shock or fire and will void your warranty.
- Keep away from flammable, explosive materials to avoid fire disaster.
- The installation place should be away from humid or corrosive substance.
- Authorized service personnel must use insulated tools when installing or working with this equipment.
- PV modules shall have an IEC 61730 class A rating.
- Never touch either the positive or negative pole of PV connecting device. Strictly prohibit touching both of them at the same time.
- The unit contains capacitors that remain charged to a potentially lethal voltage after the MAINS , battery and PV supply has been disconnected.
  Hazardous voltage will present for up to 5 minutes after disconnection from power supply.
- CAUTION-RISK of electric shock from energy stored in capacitor, Never operate on the inverter couplers, the MAINS cables, Battery cables, PV cables or the PV generator when power is applied. After switching off the PV , battery and Mains, always wait for 5minutes to let the intermediate circuit capacitors discharge before unpluging DC ,battery inplug and MAINS couplers.
- When accessing the internal circuit of inverter, it is very important to wait 5 minutes before operating the power circuit or demounting the electrolyte capacitors inside the device. Do not open the device before hand since the capacitors require time to sufficiently discharge!
- Measure the voltage between terminals UDC+ and UDC- with a multi-meter (impedance at least 1Mohm) to ensure that the device is discharged before beginning work (35VDC) inside the device.

▶ Surge protection devices (SPDs) for PV installation

WARNING !
Over-voltage protection with surge arresters should be provided when the PV power system is installed.
We recommend that the grid connected inverter install SPDs in both PV input side and MAINS side.

Lightning will cause a damage either from a direct strike or from surges due to a nearby strike.

Induced surges are the most likely cause of lightning damage in majority or installations, especially in rural areas where electricity is usually provided by long overhead lines. Surge may be included on both the PV array conduction and the AC cables leading to the building.

Specialists in lightning protection should be consulted during the end use application. Using appropriate external lightning protection, the effect of a direct lightning strike into a building can be mitigated in a controlled way, and the lightning current can be discharged into the ground.

Installation of SPDs to protect the inverter against mechanical damage and excessive stress include a surge arrester in case of a building with external lightning protection system (LPS) when separation distance is kept.

To protect the DC system, surge suppression device (SPD type2) should be fitted at the inverter end of the DC cabling and at the array located between the inverter and the PV generator, if the voltage protection level (VP) of the surge arresters is greater than 1100V, an additional SPD type 3 required for surge protection for electrical devices.

To protect the AC system, surge suppression devices (SPD type2) should be fitted at the main incoming point of AC supply (at the consumer's cutout), located between the inverter and the meter/distribution system; SPD (test impulse D1) for signal line according to EN 61632-1.

All DC cables should be installed to provide as short a run as possible, and positive and negative cables of the string or main DC supply should be bundled together. Avoiding the creation of loops in the system. This requirement for short runs and bundling includes any associated earth bundling conductors.

Spark gap devices are not suitable to be used in DC circuits once conducting, they won't stop conducting until the voltage across their terminals is typically below 30 volts.

▶ Anti-Islanding Effect

Islanding effect is a special phenomenon that grid-connected PV system still supply power to the nearby grid when the voltage loss is happened in the power system. It is dangerous for maintenance personnel and the public. X3-Hybrid seires inverter provide Active Frequency Drift(AFD) to prevent islanding effect.

▶ *PE Connection and Leakage Current*

- All inverters incorporate a certified internal Residual Current Device(RCD) in order to protect against possible electrocution and fire hazard in case of a malfunction in the PV array, cables or inverter.There are 2 trip thresholds for the RCD as required for certification (IEC 62109-2:2011). The default value for electrocution protection is 30mA,and for slow rising current is 300mA.
- If an external RCD is required by local regulations,check which type of RCD is required for relevant electric code. It recommends using a type-A RCD. The recommended RCD values is 100mA or 300mA unless a lower value is required by the specific local electric codes.When required by local regulations,the use of an RCD type B is permitted.

> **WARNING !**
> High leakage current!
> Earth connection essential before connecting supply.

- Incorrect grounding can cause physical injury, death or equipment malfunction and increase electromagnetic.
- Make sure that grounding conductor is adequately sized as required by safety regulations.
- Do not connect the ground terminals of the unit in series in case of a multiple installation. This product can cause current with a d.c component, Where a residual current operated protective (RCD) or monitoring (RCM) device is used for protection in case of direct or indirect contact, only an RCD or RCM of type B is allowed on the supply side of this product.

For United Kingdom

- The installation that connects the equipment to the supply terminals shall comply with the requirements of BS 7671.
- Electrical installation of PV system shall comply with requirements of BS 7671 and IEC 60364-7-712.
- No protection settings can be altered.
- User shall ensure that equipment is so installed, designed and operated to maintain at all times compliance with the requirements of ESQCR22(1)(a).

For Australia and New Zealand

- Electrical installation and maintenance shall be conducted by licensed electrician and shall comply with Australia National Wiring Rules.

▶ *Battery Safety Instructions*

SolaX X3-Hybrid series inverter should be worked with high voltage battery, for the specific parameters such as battery type, nominal voltage and nominal capacity etc., please refer to section 4.3.
As accumulator batteries may contain potential electric shock and short-circuit current danger, to avoid accidents that might be thus resulted, the following warnings should be observed during battery replacement:

1: Do not wear watches, rings or similar metallic items.
2: Use insulated tools.
3: Put on rubber shoes and gloves.
4: Do not place metallic tools and similar metallic parts on the batteries.
5: Switch off load connected to the batteries before dismantling battery connection terminals.
6: Only personal with proper expertise can carry out the maintenance of accumulator batteries.

2.2 Explanation of Symbols

This section gives an explanation of all the symbols shown on the inverter and on the type label.

- Symbols on the Inverter

Symbol	Explanation
	Operating Display.
	Battery status.
	An error has occurred, please inform your installer immediately.

- Symbols on the Type Label

Symbol	Explanation
	CE mark. The inverter complies with the requirements of the applicable CE guildlines.
	TUV certified.
	RCM remark.
	SAA certification.
	Beware of hot surface. The inverter can become hot during operation. Avoid contact during operation.
	Danger of high voltages. Danger to life due to high voltages in the inverter!
	Danger. Risk of electric shock!
	Observe enclosed documentation.

	The inverter can not be disposed together with the household waste. Disposal information can be found in the enclosed documentation.
	Do not operate this inverter until it is isolated from battery,mains and on-site PV generation suppliers.
5min	Danger to life due to high voltage. There is residual voltage existing in the inverter after powering off, which needs 5 min to discharge. • Wait 5 min before you open the upper lid or the DC lid.

2.3 EC Directives

This chapter follows the requirements of the European low voltage directives, which contains the safety instructions and conditions of acceptability for the endues system, which you must follow when installing, operating and servicing the unit. If ignored, physical injury or death may follow, or damage may occur to the unit. Read this instructions before you work on the unit. If you are unable to understand the dangers, warnings, cautions or instructions, please contact an authorized service dealer before installing. Operating and servicing the unit.

The Grid connected inverter meets the requirement stipulated in Low Voltage Directive (LVD) 2014/35/EU and Electromagnetic Compatibility (EMC) Directive 2014/30/EU. The unit is based on:

EN 62109-1:2010 ; EN 62109-2:2011 ; IEC 62109-1(ed.1) ; IEC62109-2(ed.1)

EN 61000-6-3:2007+A:2011 ; EN 61000-6-1:2007 ; EN 61000-6-2:2005

In case of installation in PV system, start up of the unit (i.e. start of designated operation) is prohibited until it is determined that the full system meets the requirements stipulated in EC Directive (2014/35/EU,2014/30/EU, etc.)

The grid connected inverter leave the factory completely connecting device and ready for connection to the mains and PV supply ,the unit shall be installed in accordance with national wiring regulations. Compliance with safety regulations depends upon installing and configuring system correctly, including using the specified wires. The system must be installed only by professional assemblers who are familiar with requirements for safety and EMC. The assembler is responsible for ensuring that the end system complies with all the relevant laws in the country where it is to be used.

The individual subassembly of the system shall be interconnected by means of the wiring methods outlined in national/international such as the national electric code (NFPA) No.70 or VDE regulation 0107.

3 Introduction

3.1 Basic Features

X3-Hybrid Seires is a high-quality inverter which can convert solar energy to AC energy and store energy into battery.
Energy producted by inverter can be used to optimize self consumption, store in the battery for future use or feedin to public grid. Work mode depends on PV energy and user's preference. It can provide power for emergency use during the grid lost by using the energy from battery and inverter(generated from PV).

▶ System Diagram

E Version applies to emergency use with external changeover device installed during the grid lost.

E version is designed with two versions for customer to choose based on the local rules.

Digram A applies to the wiring rules that requires Live lines and Neutral line of alternative supply must be disconnected after the grid is off. (applies to most countires)

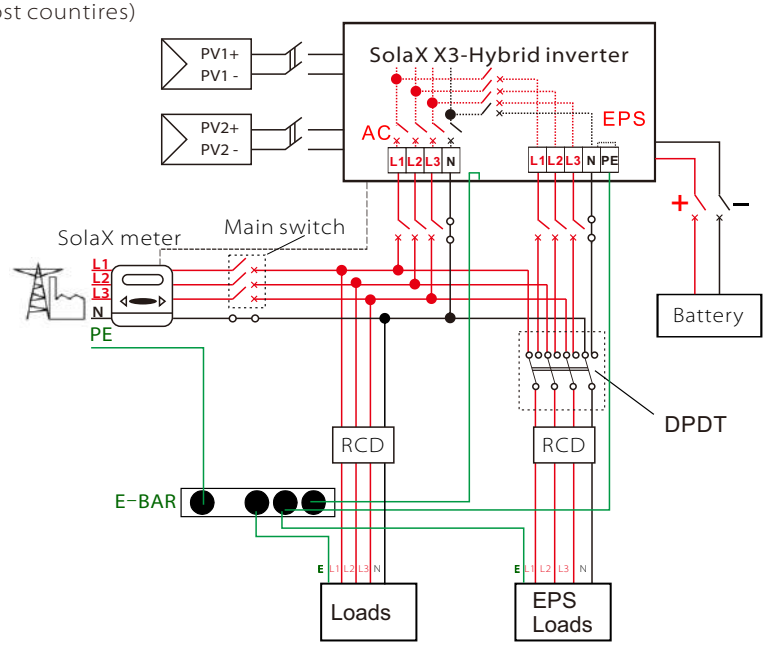

Digram B applies to the wiring rules which requires Neutral line of alternative supply must not be isolated or switched. (applies to wiring rules AS/NZS_3000:2012 for Australia and New Zealand)

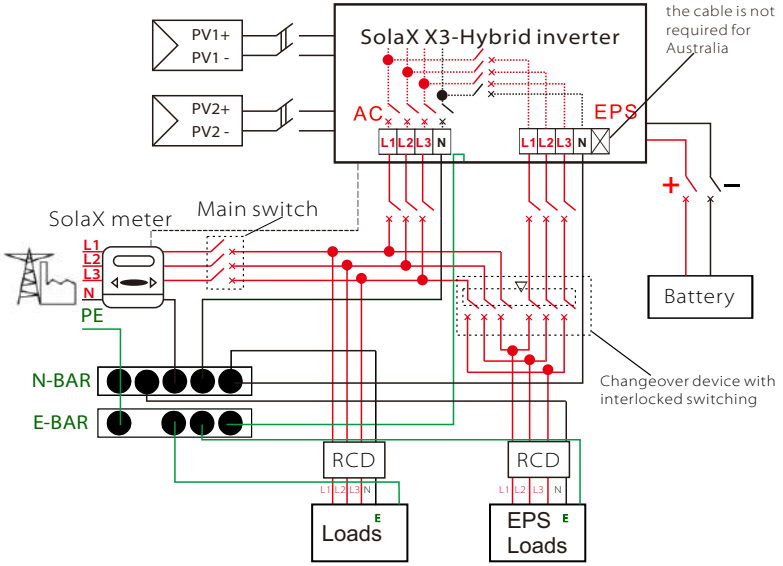

- Please control the home loads, and make sure it's within the "EPS output rating" under EPS mode, otherwise the inverter will shutdown with an "overload fault" warning.
- Please confirm with the mains grid operator whether there is any special regulations for grid connection.

3.2 Work Modes

X3-Hybrid Series inverter provides multiple work modes based on different requirements.

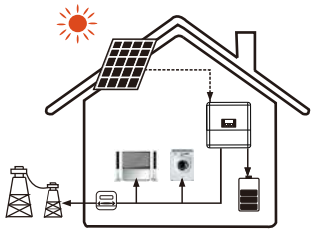

Work modes: **Self-use** (with PV Power)

Priority: load>battery>grid
This mode applies the area that has low feed-in tariff and high energy price.

The PV generated power will be used to supply the local loads firstly, then to charge the battery. The redundant power will export to the public grid.

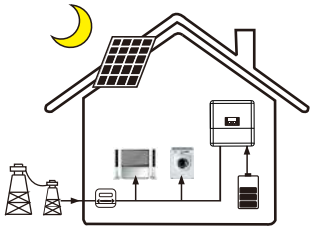

Work modes: **Self-use** (without PV Power)

When there is no PV supplied, battery will discharge for local loads firstly, and grid will supply power when the battery capacity is not enough.

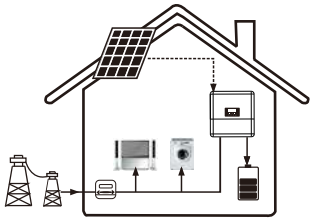

Work modes: **Force time use**

Priority:battery>load>grid(when charging)
Priority:load>battery>grid(when discharging)
This mode applies the area that has electricity price between peak and valley. User can use off-peak electricity to charge the battery.

The charging time can be set flexibly, and it also allows to choose whether charge from the grid or not.

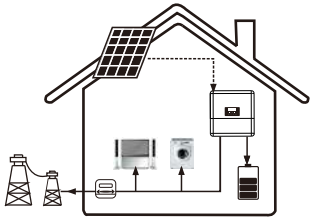

Work modes: **Feed in Priority**

Priority:load>grid>battery
This mode applies the area that has high feed-in tariff and export control.

The PV generated power will be used to supply the local loads firstly, then export to the public grid. The redundant power will charge the battery.

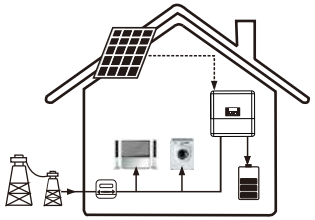

Work modes: **Back up mode**

Priority:battery>load>grid
This mode applies the area that has frequent power outages. And this mode ensures the battery will has enough energy to supply when the grid is off.

In this mode battery will be charging forcibly in the setting time and will **never be discharged** when the grid is on, and it also allows to choose whether charge from the grid or not.

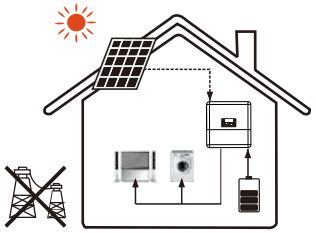

＊ EPS Status

When the grid is off, system will supply emergency power from PV or battery to supply the home loads. (Battery is necessary in EPS mode.)

3.3 Dimension

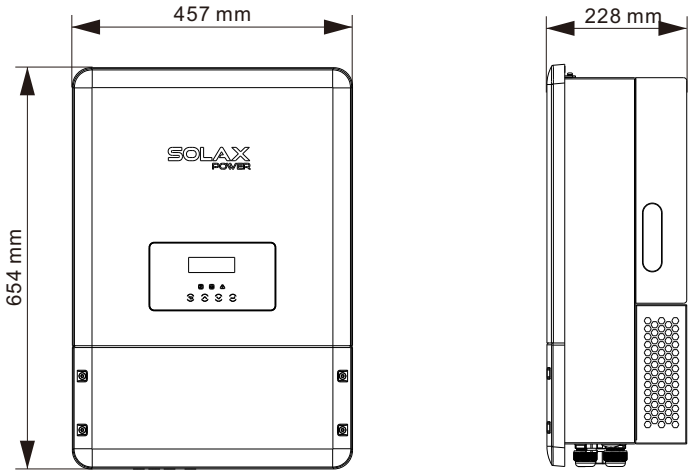

3.4 Terminals of PV inverter

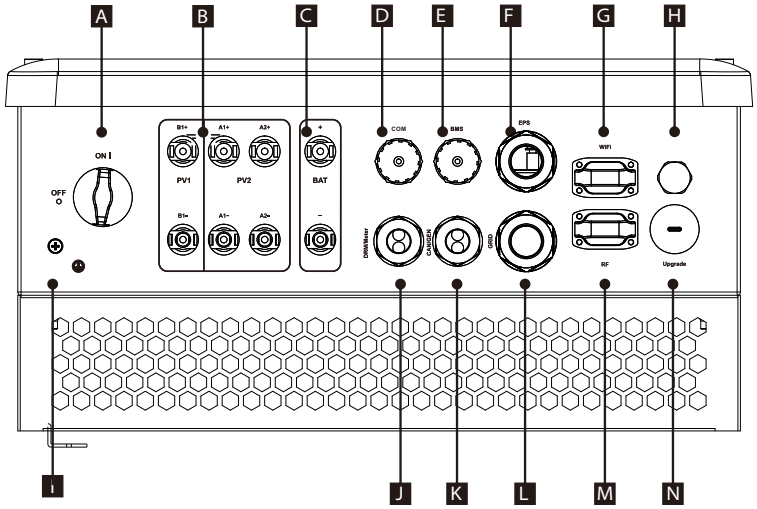

Object	Description
A	DC switch (optional)
B	PV connection area
C	Battery connection area
D	Ethernet port
E	Battery communication port
F	EPS output
G	WiFi port for external Pocket WiFi
H	Waterproof valve
I	Earthing screw
J	DRM/Meter port
K	CAN communication port for parallel operation/ GEN is a reserved port
L	Grid output
M	External port for smart plug
N	USB port for upgrading

WARNING !
Qualified electrician will be required for the installation.

4. Technical Data

4.1 DC input

Model	X3-Hybrid-5.0-D X3-Hybrid-5.0-N	X3-Hybrid-6.0-D X3-Hybrid-6.0-N	X3-Hybrid-8.0-D X3-Hybrid-8.0-N	X3-Hybrid-10.0-D X3-Hybrid-10.0-N
Max. recommended DC power [W]	A:3000/B:3000	A:4000/B:4000	A:6000/B:4000	A:8000/B:5000
Max. DC voltage[V]	1000	1000	1000	1000
Norminal DC operating voltage[V]	720	720	720	720
MPPT voltage range [V]	180-950	180-950	180-950	180-950
MPPT voltage range@full load [V]	230-800	280-800	270-800	330-800
Max. input current [A]	12/12	12/12	24/12	24/12
Max. short circuit current [A]	14/14	14/14	28/14	28/14
Start input voltage [V]	160	160	160	160
Start output voltage [V]	180	180	180	180
No. of MPP trackers	2	2	2	2
Strings per MPP tracker	A:1/B:1	A:1/B:1	A:2/B:1	A:2/B:1
Backfeed current to PV array	0	0	0	0
DC disconnection swtich	optional			

4.2 AC output/input

Model	X3-Hybrid-5.0-D X3-Hybrid-5.0-N	X3-Hybrid-6.0-D X3-Hybrid-6.0-N	X3-Hybrid-8.0-D X3-Hybrid-8.0-N	X3-Hybrid-10.0-D X3-Hybrid-10.0-N
AC output				
Norminal AC power[VA]	5000	6000	8000	10000
Max. apparent AC power[VA]	5500	6600	8800	11000
Rated grid voltage(range)[V]	400V/230VAC;380V/220VAC			
Rated grid frequency[Hz]	50/60			
Norminal AC current[A](@230VAC)	7.2	8.7	11.6	14.5
Max.AC current[A]	8.0	9.6	12.8	15.9
Displacement power factor	0.8 leading...0.8 lagging			
Total harmonic distortion(THDi)	< 3%			
Load control	Yes(optional)			
AC input				
Norminal AC power[VA]	5000	6000	8000	10000
Rated grid frequency[Hz]	50/60			
Rated grid frequency(range)[Hz]	47...53/57...63			
Norminal AC current[A] (@230VAC)	7.2	8.7	11.6	14.5
Max.AC current[A]	8.0	9.6	12.8	16.0
Rated grid voltage(range)[V]	400V/230VAC;380V/220VAC			
Displacement power factor	0.8 leading...0.8 lagging			
AC inrush current[A]	32			
MAX. output overcurrent protection[A]	40			
AC maximum output fault current[A]	75			

4.3 Internal Charger

Model	X3-Hybrid-5.0-D X3-Hybrid-5.0-N	X3-Hybrid-6.0-D X3-Hybrid-6.0-N	X3-Hybrid-8.0-D X3-Hybrid-8.0-N	X3-Hybrid-10.0-D X3-Hybrid-10.0-N
Battery type	Lithium battery/Lead-acid battery			
Battery voltage[V]	160-800(800 for Lithium battery\500 for Lead-acid battery)			
Rated charge/discharge current[A]	25A			
Max. charge/discharge current[A]	25A			
Communication interfaces	CAN/RS485			
Reverse connet protection	Yes			
Over-current protection /Over-temperature protection	Yes			

4.4 Efficiency, Safety and Protection

Model	X3-Hybrid-5.0-D X3-Hybrid-5.0-N	X3-Hybrid-6.0-D X3-Hybrid-6.0-N	X3-Hybrid-8.0-D X3-Hybrid-8.0-N	X3-Hybrid-10.0-D X3-Hybrid-10.0-N
MPPT efficiency	99.90%	99.90%	99.90%	99.90%
Euro efficiency	97.00%	97.00%	97.00%	97.00%
Max. efficiency	97.80%	97.80%	97.80%	97.80%
Max. battery charge/discharge efficiency	97.00%/96.00%	97.00%/96.00%	97.50%/96.50%	97.50%/96.50%
Safety & Protection				
Over/under voltage protection	YES			
DC isolation protection	YES			
Monitoring ground fault protection	YES			
Grid protection	YES			
DC injection monitoring	YES			
Back feed current monitoring	YES			
Residual current detection	YES			
Anti-islanding protection	YES			
Over load protection	YES			
Over heat protection	YES			

4.5 EPS output (apply to version E only)

Model	X3-Hybrid-5.0-D X3-Hybrid-5.0-N	X3-Hybrid-6.0-D X3-Hybrid-6.0-N	X3-Hybrid-8.0-D X3-Hybrid-8.0-N	X3-Hybrid-10.0-D X3-Hybrid-10.0-N
EPS rated power[VA]	5000	6000	8000	10000
Max. EPS power[VA]	5000	6000	8000	10000
EPS rated voltage[v]	400V/230VAC, 380V/220VAC			
EPS rated current[A](@230VAC)	7.2	8.7	11.6	14.5
EPS peak power[W]	10000,60s	12000,60s	14000,60s	15000,60s
Switch time[s]	<1.5s			
Total harmonic distortion(THDv)	<2%			
Parallel operation	10			
MAX. output overcurrent protection[A]	48			

4.6 General Data

Model	X3-Hybrid-5.0-D X3-Hybrid-5.0-N	X3-Hybrid-6.0-D X3-Hybrid-6.0-N	X3-Hybrid-8.0-D X3-Hybrid-8.0-N	X3-Hybrid-10.0-D X3-Hybrid-10.0-N
Dimension (W/H/D)[mm]	457*654*228			
Dimension of packing (W/H/D)[mm]	777*558*355			
Net weight [kg]	45	45	45	45
Gross weight [kg]	48	48	48	48
Installation	Wall-mounted			
Operating temperature range[℃]	-20~+60 (derating at 45)			
Storage temperature [℃]	-20~+60			
Storage/Operation relative humidity	0%~95%, (without condensation)			
Altitude [m]	<2000			
Ingress Protection	IP65(for outdoor use)			
Standby consumption[W]	200W for hot standby, 15W for cold standby			
Idle mode	YES			
Over Voltage Category	III(electric supply side), II(PV side)			
cooling	Nautral			
Inverter Topology	Transformerless			
Communication interface	Ethernet, Meter, WIFI(optional), RF(optional), DRM, USB, ISO alarm,GEN,CAN,BMS,NTC			
LCD display	Backlight 20*4 character			
Standard warranty	Standard 5 years(10 years optional)			
Button	Capacitive Touch Sensor			
Buzzer	1,inside(EPS & earth fault)			

5. Installation

5.1 Check for Physical Damage

Make sure the inverter is intact during transportation. If there is any visible damage, such as cracks, please contact your dealer immediately.

5.2 Packing List

Open the package and take out the product, please check the accessories first. The packing list shown as below.

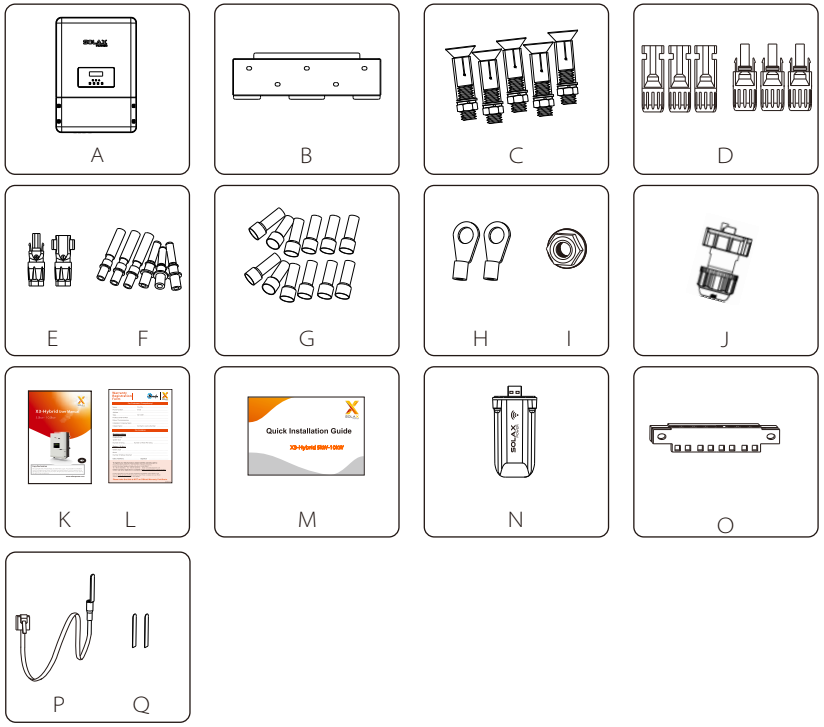

Object	Description
A	Inverter
B	Bracket
C	Expansion bolt (5)

D	PV connectors (3*positive, 3*negative)
E	Battery connectors (1*positive, 1*negative)
F	PV pin connectors (3*positive, 3*negative)
G	AC terminals/EPS terminals (optional)/Earth terminals (12)
H	Ring terminal (for grounding) (2)
I	Grounding nut
J	Waterproof connector with RJ45 (2*RJ45)
K	User manual
L	Warranty card
M	Quick installation guide
N	WiFi module (optional)
O	8 pin terminal for meter connection
P	NTC (optional)
Q	scotch tape(2)

5.3 Mounting

➢ Installation Precaution

X3-Hybrid Series inverter is designed for outdoor installation (IP 65).
Make sure the installation site meets the following conditions:

- Not in direct sunlight.
- Not in areas where highly flammable materials are stored.
- Not in potential explosive areas.
- Not in the cool air directly.
- Not near the television antenna or antenna cable.
- Not higher than altitude of about 2000m above sea level.
- Keep Dry-The package/product must be protected from excessive humidity and must accordingly be stored under cover.
- Under good ventilation condition.
- The ambient temperature in the range of -20 to +60 .
- The slope of the wall should be within ±5° .

The wall hanging the inverter should meet conditions below:

1.solid brick/concrete, or strength equivalent mounting surface;

2.Inverter must be supported or strengthened if the wall's strength isn't enough(such as wooden wall, the wall covered by thick layer of decoration)

Please AVOIDE direct sunlight, rain exposure, snow laying up during installation and operation.

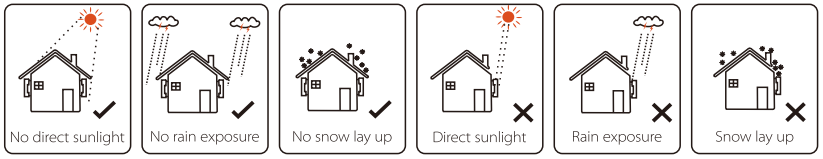

➢ Space Requirement

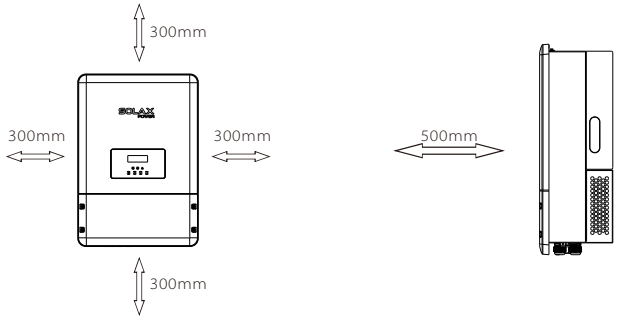

➢ Mounting Steps

Tools required for installation.

Installation tools : crimping pliers for binding post and RJ 45, screwdriver, manual wrench and Φ10 driller.

Step 1: Screw the wall bracket on the wall

a) Use the wall bracket as a template to mark the position of the 5 holes on the wall.
b) Drill holes with driller, make sure the holes are deep enough (at least 50mm) for installation, and then tighten the expansion tubes.
c) Install the expansion pipe in the hole and tighten it.Then attach the expansion screws to the wall.(Φ 10 drilling machine.Power: 2.5 0.2 Nm)

Step 2: Install the screw holes on the wall with the screws.

d) Hang the inverter on the bracket, move the inverter close to the bracket and gently put down the inverter to ensure that the back plate and wall hanging plate on the machine are fixed.

Φ 10 drilling machine.Power: 2.5 ± 0.2

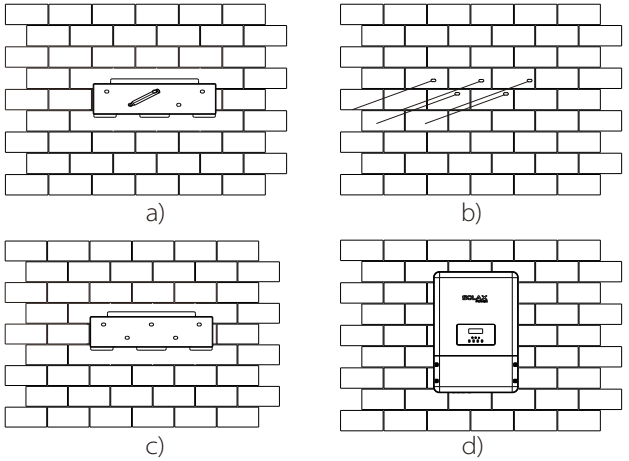

6. Electrical Connection

6.1 PV Connection

X3-Hybrid can be connected with PV modules in series with 2 MPPTS for 5.0KW, 6.0KW, 8.0KW and 10.0KW.
Select PV modules with excellent function and reliable quality. Open-circuit voltage of module arrays connected in series should be under Max. DC input voltage; operating voltage should be conformed to MPPT voltage range.
The configuration current should be under the maximum DC input current.

Max.DC Voltage Limitation

Model	X3-Hybrid-5.0-D X3-Hybrid-5.0-N	X3-Hybrid-6.0-D X3-Hybrid-6.0-N	X3-Hybrid-8.0-D X3-Hybrid-8.0-N	X3-Hybrid-10.0-D X3-Hybrid-10.0-N
Max. DC Voltage (V)	1000			
MPPT Voltage Range(V)	180-950			

Warning!

- PV module voltage is very high, which already achieve dangerous voltage range, please comply with electric safety rules when connecting.
- Please do not make PV positive or negative ground!

Note!

- Please choose a fitting external DC switch if the model (X3-Hyrbid-5.0-N, X3-Hyrbid-6.0-N, X3-Hyrbid-8.0-N, X3-Hyrbid-10.0-N) is purchased.
- The following requirements of PV modules need to be applied for each input area;
  - Same type - Same quantity - Identical alignment - Identical tilt
  Please do not make PV positive or negative ground!
- In order to save cable and reduce the DC loss, we suggest to install the inverter near PV modules.

Note!

PV connection mode below is NOT allowed!

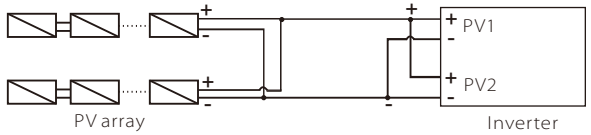

PV connection mode below is allowed!

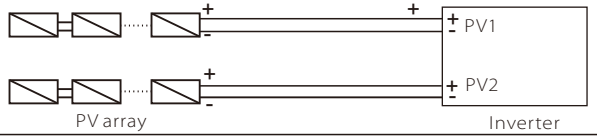

Connection Steps:

Step1. Checking PV module.
1.1 Use multimeter to measure module array voltage.
1.2 Check the PV+ and PV- from the PV string combiner box correctly.
1.3 Please make sure the impedance bewteen the positive pole and negative pole of PV to earth should be MΩ level.

Step2. Separating the DC connector.

Step3. Wiring.
3.1 Choose the 12 AWG wire to connect with the cold-pressed terminal.
3.2 Remove 10mm of insulation from the end of wire.
3.3 Insert the insulation into pin contact and use crimping plier to clamp it.

Step4. Insert pin contact through the cable nut to assemble into back of the male or female plug. When you feel or hear a "click" sound the pin contact assembly is seated correctly.

Step5. Plug the PV connector into the corresponding PV connector on inverter.

Step2.

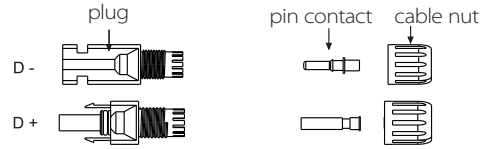

Step3.

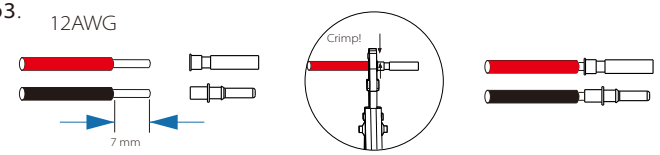

Step4.

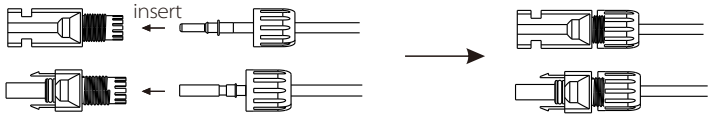

Step5.

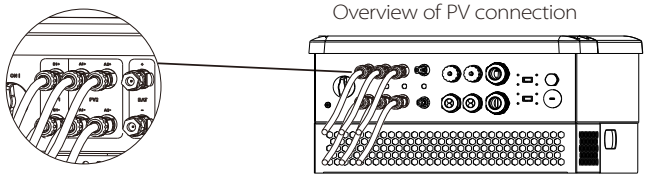

6.2 Grid Connection

X3-Hybrid series inverter are designed for three phase grid. Voltage is 380/400V, frequency is 50/60Hz. Other technical requests should comply with the requirement of the local public grid.

Table 4 Cable and Micro-breaker recommended

Model	X3-Hybrid-5.0-D X3-Hybrid-5.0-N	X3-Hybrid-6.0-D X3-Hybrid-6.0-N	X3-Hybrid-8.0-D X3-Hybrid-8.0-N	X3-Hybrid-10.0-D X3-Hybrid-10.0-N
Cable	4-5mm	4-5mm	4-5mm	5-6mm
Micro-breaker	20A	20A	25A	32A

Micro-breaker should be installed between inverter and grid, any load should not be connected with inverter directly.

Incorrect Connection between Load and Inverter

Connection Steps:

Step1. Check the grid voltage.
1.1 Check the grid voltage and compare with the permissive voltage range (Please refer to technical data).
1.2 Disconnect the circuit-breaker from all the phases and secure against re-connection.

Step2. Remove the down-top cover from the inverter.

Step3. Make AC wires.
3.1 Choose the appropriate wire(Cable size: refer to Table 4).
3.2 Reserve about 60mm of conductor material sectional area.
3.3 Remove 12mm of insulation from the end of wire.
3.4 Insert stripped wires into AC terminal and insure all conductor strands are captured in the AC terminal.
3.5 Compress the AC terminal head by using a crimping pliers and screw down screw cap tightly.

Step4. Insert AC cable into Grid port through screw cap and then tighten the screw cap. Insert L1,L2,L3 wire and N wire into corresponding ports of AC terminal.Compress the PE wire with earth terminal , then screw it on the grounding stud.

Step2.

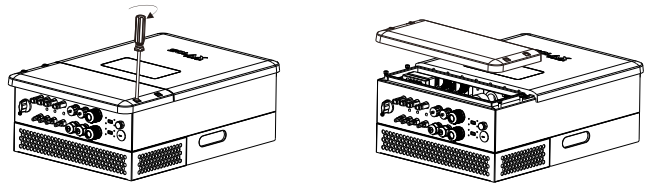

Φ4 hexagon wrench.torque:3±0.1Nm

Step3.

Cable Size: Refer to Tabel 4(page 24)

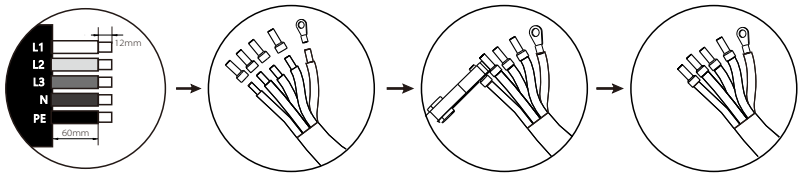

Step4.

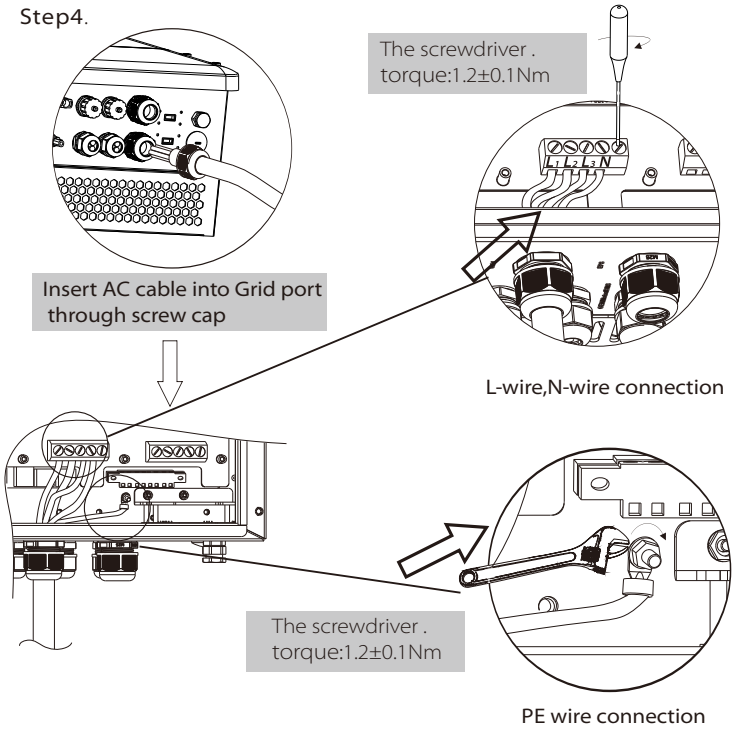

6.3 EPS Connection(apply to E Version)

X3-Hybrid series inverter has On and Off grid function, the inverter will deliver output power through AC port when the grid is on, and it will deliver output power through EPS port when the the grid is off.

This function can be achieved manually or automatically according to user's preference.If user wants to use the off grid function manually, it will need to be installed an external switch. Please refer to specific wiring diagram below or as described in quick installation guide.
For automatical solution, please contact our sales.

EPS wiring diagram

The below diagram are for reference based on different local wiring rules, please follow the local rules for the externel wiring to choose suitable wiring mode.
Diagram A : Neutral line of alternative supply must not be isolated or switched.
Diagram B : Neutral line of alternative supply can be isolated or switched.

Digram A • E Version • For AU/NZ

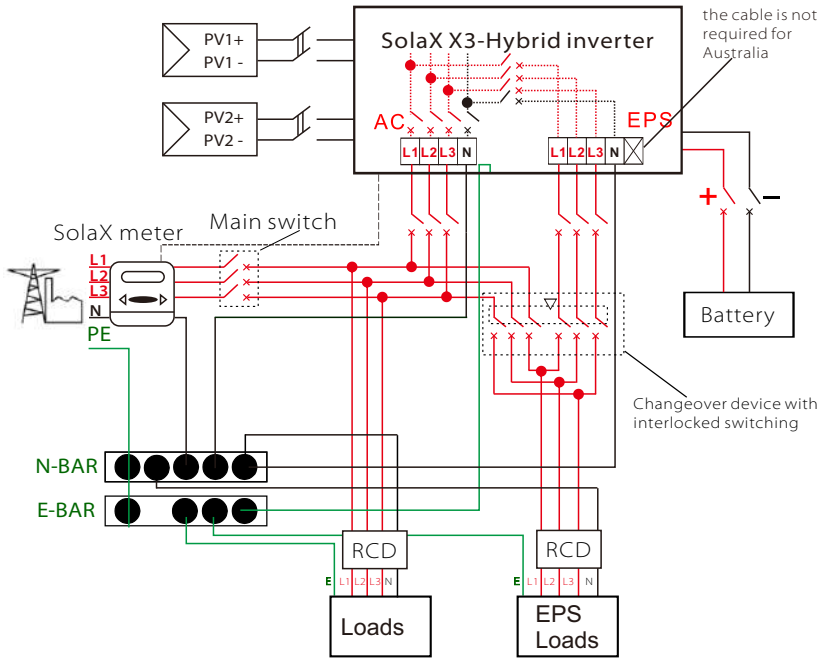

Digram B • E Version • For Other Countries

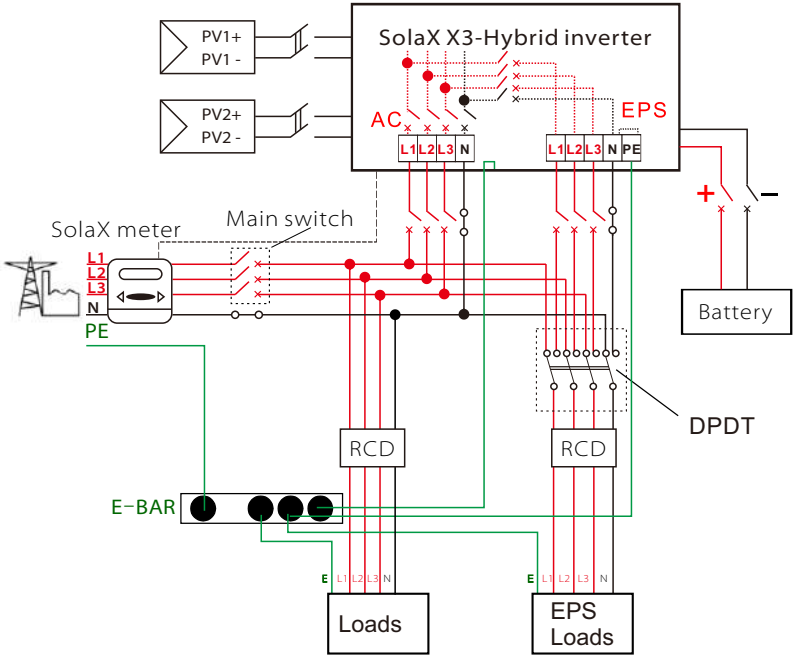

Please contact our sales for any compatible contactor purchase requirement .

Note!
In case of discrepancies between wiring mode of local policy and the operation guide above, espescially for the wiring of neutral line, grounding and RCD, please contact us before any operation!

➢ Connection Steps:

Step1.Make EPS wires.
1.1 Choose the appropriate wire(cable size: refer to picture below).
1.2 Reserve about 60mm of conductor material sectional area.
1.3 Remove 12mm of insulation from the end of wire.
1.4 Insert stripped wires into AC terminal and insure all conductor strands are captured in the AC terminal.
1.5 Compress the AC terminal head by using a crimping pliers and screw down screw cap tightly.
Step2. Insert EPS cable into EPS port through screw cap and then tighten the screw cap. Insert L1,L2,L3 wire, N wire and PE wire(PE wire does not applies to Australia) into corresponding ports of EPS terminal and screw them tightenly.

Step1.

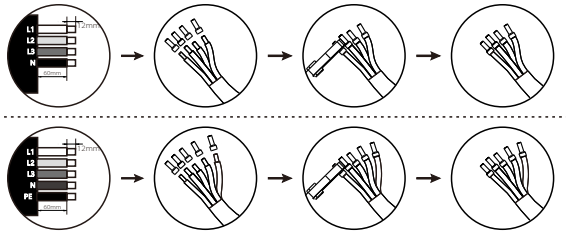

for AU/NZ

for other countries

Table 5 Cable and Micro-breaker recommended

Model	X3-Hybrid-5.0-D X3-Hybrid-5.0-N	X3-Hybrid-6.0-D X3-Hybrid-6.0-N	X3-Hybrid-8.0-D X3-Hybrid-8.0-N	X3-Hybrid-10.0-D X3-Hybrid-10.0-N
EPS Cable	5mm	5mm	5mm	5mm
EPS breaker	25A	25A	32A	32A

Step2.

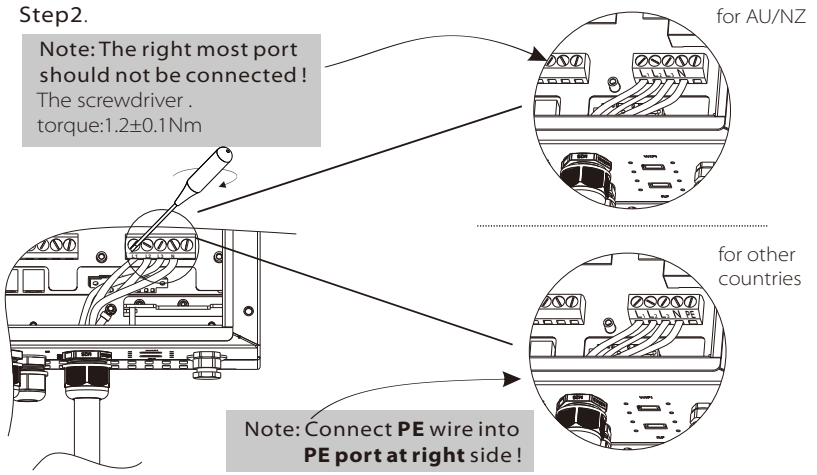

➢ Requirements for EPS load

WARNING !
Make sure the EPS load power rating is within EPS output rating, otherwise the inverter will shutdown with an "over load" warning.

When an "over load" is appeared, adjust the load power to make sure it is within the EPS output power range, then turn the inverter back on.

For the nonlinear load, please make sure the inrush power should be within the EPS output power range.

Configuration current less than the maximum dc input current, generally lithium and lead acid capacity and voltage are linear decline.

Below table shows some common feasible loads for you reference.

Note:Please check with the manufacturer for high power inductive load.

Type	Power		Common equipment	Example		
	Start	Rated		Equipment	Start	Rated
Resistive load	X 1	X 1	Incandescent lamp TV	100W Incandescent lamp	100VA (W)	100VA (W)
Capacitive load	X 2	X 1.5	Fluorescent lamp	40W Fluorescent lamp	80VA (W)	60VA (W)
Inductive load	X 3~5	X 2	Fan Fridge	150W Fridge	450-750VA (W)	300VA (W)

6.4 On-Grid Parallel Connection

X3-Hybrid Series Inverter provides the parallel connection function which should make ten inverters maximumly connected in one system when the grid is on.
In this system, one inverter will be set as the "Master inverter" which will control every other inverter's energy management and dispatch control. Only one meter needs to be connected in this system and communicate with the "Master inverter", and all other slaverinverter communicate with "Master inverter" by CAN communication-parallel connection.

> **Note!**
> Please note that the parallel connection function can only be used in the case of grid connection. The off-grid parallel connection function currently supports up to 5 units, and the off-grid parallel connection function is still under development for 10 units.

➢ System Diagram

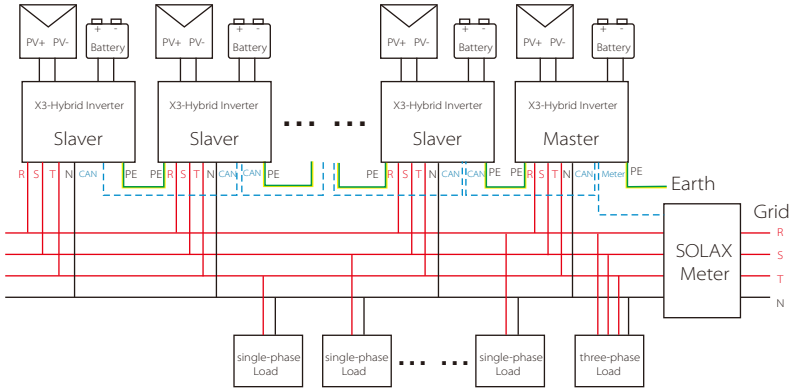

➢ Work Modes in parallel system

There are three work modes in parallel system, and your acknowledge of different inverter's work modes will help you understand parallel system better, therefore please read it carefully before operating.

Free mode	Only if no one inverter is set as a "Master", all inverters are in free mode in the system.
Master mode	When one inverter is set as a "Master", this inverter enters master mode. Master mode can be changed to free mode or slaver mode by LCD setting.
Slaver mode	Once one inverter is set as a "Master", all other inverters will enter slaver mode automatically. Slaver mode can not be changed from other modes by LCD setting.

➢ Wiring Operation and LCD Setting

> Note: Before operation, please ensure that all the inverters' software version must be the same, otherwise this function can not be use.

Step1: Connect all inverters' communication together by connecting network cables between CAN ports.
- Use standard CAT7 network cables for CAN-CAN connection and CAT5 cable for CAN-Meter connection.
- Insert one side of CAT7 cable into the first inverter's CAN port and the other side into the next inverter's CAN port.
- Insert one side of CAT5 cable into the Meter port of meter, and the other side into the CAN 1 port the first inverter or the CAN 2 port of the last inverter.

-(Note: PV and battery should both be connected to the inverter with meter cable plugged.)

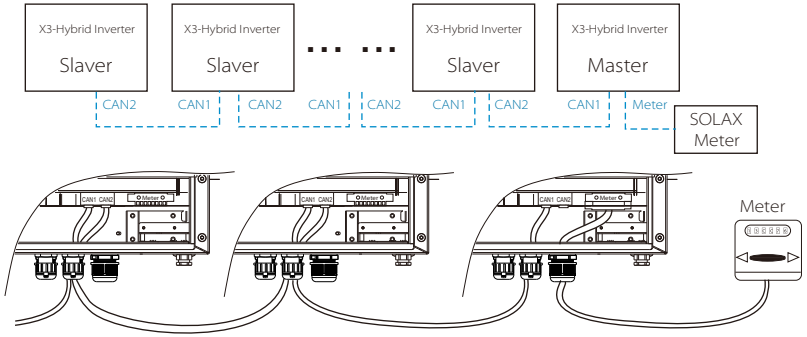

Step2: Set the DIP switch (No need to set all inverter's DIP swtich) .
- Find the inverter with meter cable plugged.
- Remove the top-down cover from this inveter, and find the DIP switch on the right of the CAN2 port on the control board.
- Push the white DIP switch to "ON" position (from down to up) by a suitable tweezers.

(Note:Please pay attention to the position of the DIP switch, which is very small)

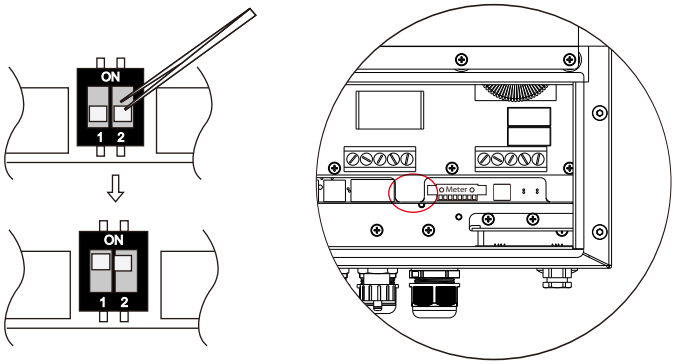

Step3: Find the inverter connected with the meter ,then enter setting page of the inverter LCD display, then click parallel setting, and choose "Master".

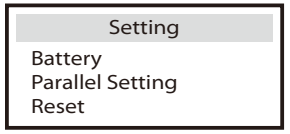

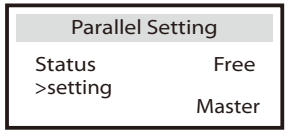

➢How to exit from parallel system

If one inverter wants to exit from this parallel system, please do the steps as below:
-step1: Disconnect all the network cables on the CAN port.
-step2: Enter setting page and click parallel setting, and choose "Free".

> Note!
> - If a slaver inverter is set to "Free" mode but not disconnect the network cable, this inverter will return to "Slaver"mode automatically.
> - If a slaver inverter is disconnected with other inverter but not be set to "Free" mode, this inverter will stop working and maintain "waiting" status.

LCD display

Main display:
Once inverter enters parallel system, the "today yield" will be replaced by " Inveter Class", and parallel relevant fault has a higher priority than other faults and will be showed firstly on main display.

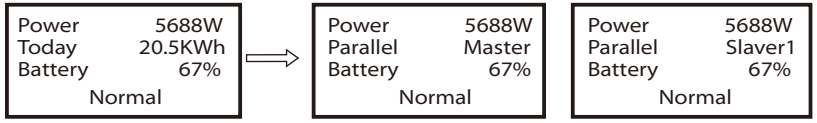

Status display:
User can obtain all the status data from master inverter. System power and individual slaver inverter power can be obtain in status display of master inverter.

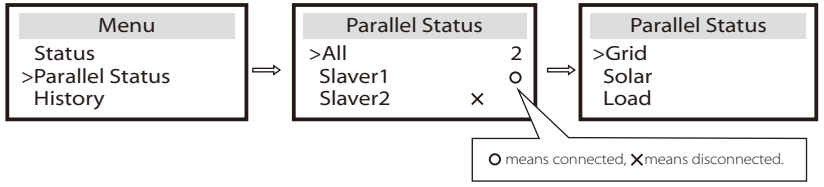

➢Parallel Control Function

Master inverter has an absolute lead in the parallel system to control all slaver inverter's energy management and dispatch control. Once master inverter has some error and stop working, all slaver inverter will be stoped simultaneously. But master inverter is independentof all slaver inverters to work and will not be affected by slaver inverter's fault.

Overall system will be running according to master inveter's setting parameters, and most setting parameters of slaver inverter will be kept but not be excuted. Once slaver inverter exit from system and be running as an independent unit, its all setting will be re-excuted.

The rest of this section covers several important parallel control functions, and the next page table shows which LCD options are controlled by master inverter and which can work independently.

Off mode setting:
Off mode can only be set by master inverter (long press ESC button on LCD) .

Safety setting:
System safety protection is excuted by master inverter's safety. Slaver inverter protection mechanism will only be triggered by master inverter's instructions.

Self-use setting:
If system is running as self-use mode, please note the FeedinPowerLimit set of master inverter is for the overall system and the corresponding set of slaver inverter is invalid.

Force on time setting:
If system is running as force on time mode, please note all sets about force on time are all for the overall system and the corresponding sets of slaver inverter are invalid.

Power Factor setting:
All sets about power factor are all for the overall system and the corresponding sets of slaver inverter are invalid.

Remote control setting:
The remote demand instructions received by master inverter will be interpreted as the demand instructions to overall system.

6.5 Battery Connection

Charging & discharging system of X3-Hybrid series inverter is designed for **high-voltage lithium battery and lead-acid battery.**.
Before choosing battery, please note the maximum voltage of battery can not exceed **800V** , and the battery communication should be compatible with X3-Hybrid inverter.
*Please X3-Hybrid inverter can also work with lead-acid battery,*and the maximum voltage of battery can not exceed **500V** *.For a more detailed explanation, please refer to Important Instructions for lead-acid battery.*

➢ Battery breaker

Before connecting to battey, please install a nonpolarized DC breaker to make sure inverter can be securely disconnected during maintanance.

Model	X3-Hybrid-5.0-D X3-Hybrid-5.0-N	X3-Hybrid-6.0-D X3-Hybrid-6.0-N	X3-Hybrid-8.0-D X3-Hybrid-8.0-N	X3-Hybrid-10.0-D X3-Hybrid-10.0-N
Voltage	Nominal voltage of DC breaker should be larger than maximum voltage of battery.			
Current[A]	32A			

➢ Battery connection diagram

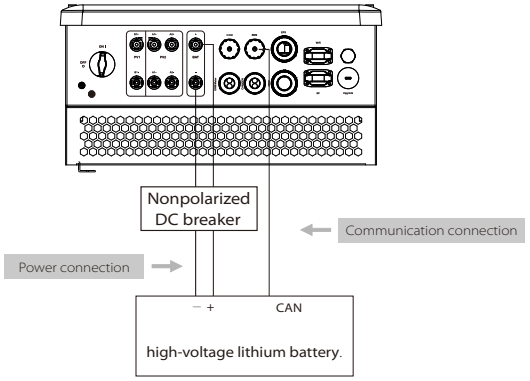

Note:
When working with Pylontech batteries, It is recommended the number of battery module (H48050-15S) is 4-15 and the number of battery manager system (SC0500A-100S) is 1.
When working with SOLAX batteries, It is recommended the number of battery module (HV10045/HV10063) is 2-4 and the number of battery controller(MC0500) is 1.

Lead-acid battery connection diagram

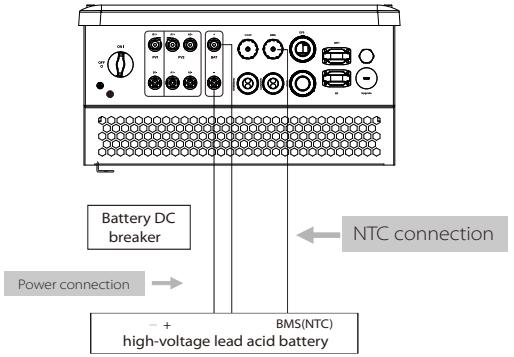

➢ Communication PIN Definition

Communication interface bewteen inverter and battery is CAN with a RJ45 connector.
Note :For lithium batteries, the BMS PIN is 4/5/6/7/8, for Lead acid battery, NTC PIN is 1.

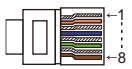

PIN	1	2	3	4	5	6	7	8
Definition	NTC	GND	GND	BMS_CANH	BMS_CANL	GND	BMS_485A	BMS_485B

> Note
> The lithium battery communication can only work when the battery BMS is compatible with the inverter. The lead acid battery controls the inverter charging and discharging by NTC temperature sensing.

➢ Power Connection Steps:

Step1. Choose the 9 AWG wire and strip the cable to 15mm.

Step2. Insert the stripped cable up to the stop (negative cable for DC plug(-) and positive cable for DC socket(+) are live). Hold the housing on the screw connection.

Step3. Press down spring until it clicks audibly into place.(The live wire must be visible in the chamber)

Step4. Tighten the screw connection(tighten torque:3.0Nm)

Step5. Plug the battery connectors into the corresponding BAT port of inverter.

Step2.

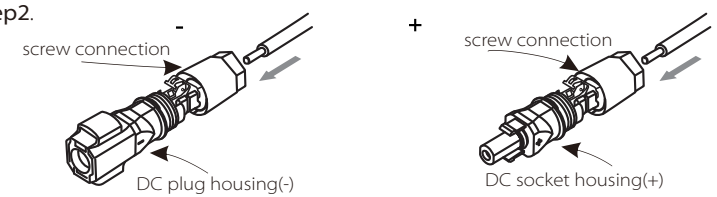

Step3.

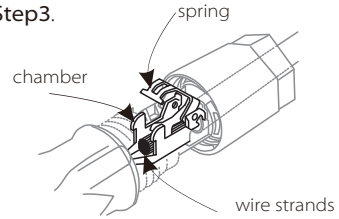

Step 4.

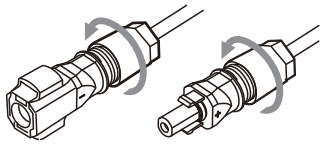

Tighten torque:3.0Nm

Step5.

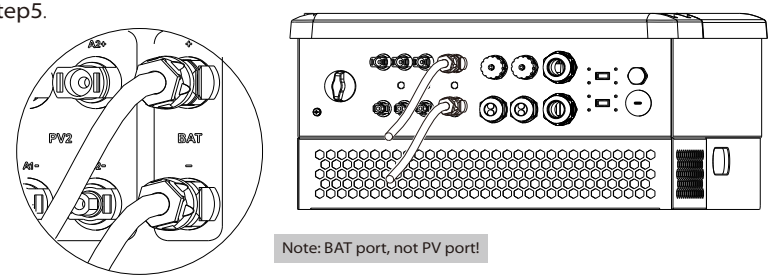

Note: BAT port, not PV port!

Note: The positive and negative lines must be connected correctly to the BAT+ and BAT- terminals. Otherwise it may cause damage or fire to the inverter..

➢ Communication Connection Steps:

Step1. Disassemble the BMS cable gland.

Step2. Prepare a communication cable(without sheath) and insert the communication cable through the cable nut.

Step3. Insert the communication terminal into the BMS port.

Battery BMS module port(Pylontech: RS485 port; Triple Power: CAN port; Please check the battery manual for more details).

Step1,2

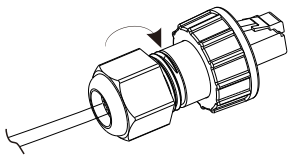

Tighten torque:3.0Nm

Step3

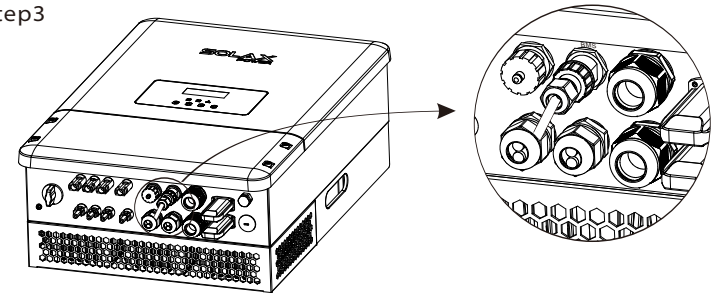

➢ NCT connection of lead acid battery terminal:

Step1: Please find the NTC and a piece of scotch tape in inverter accessories package.

Step2: Make the scotch tape adhere to NTC metallic interface.

Step1.

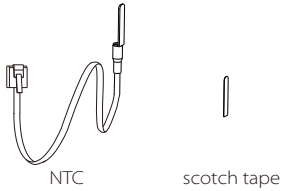

Step 2.

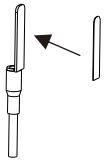

Step3: Insert the RJ45 port of NTC into BMS port of inverter, and make the metallic interface adhere to the battery interface (any place but must be nonmetallic).

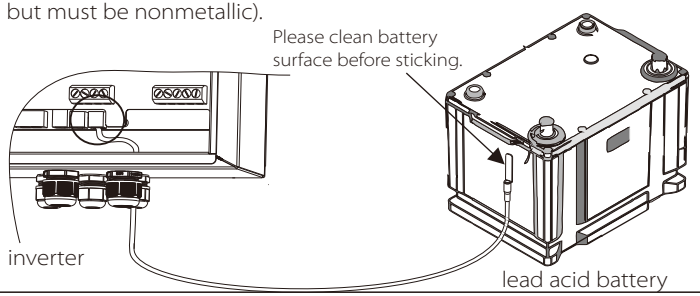

➢ LCD setting steps:

Step1: enter charger setting page.

Step2: choose battery type to " Lead-acid".

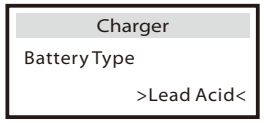

Note: Once BMS is connected with inverter, the battery type will change to " lithium" automatically. Once battery type is changed to "lithium" manually, all sets can not be saved and will be lost.

Step3: set voltage and current parameters.

There are 5 parameters that need to be set in "charger" section.
It can not be exited from the lead-acid setting pages unless all these 5 parameters have been set already.

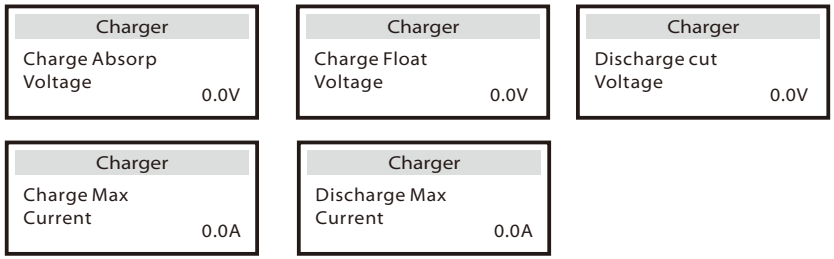

➢ Lead-acid batteries have three charging stages

Due to considering the lead acid character and lifetime, it need to set 3 stages during charging, which can increase its charging efficiency. In stage 1, it will be charged with constant current till the voltage rises to charge absorp volt to enter stage 2. In stage 2, it can be charged more efficiently with constant voltage till charge current is more than 300W. Then it will enter stage 3 for floating charging.

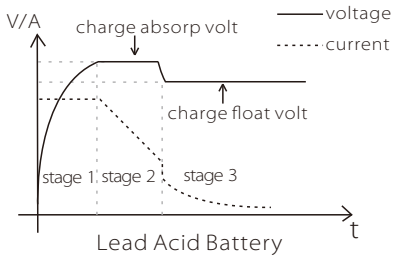

Normally rated charge absorp/float voltage and discharge cut voltage of one single battery can be found in battery manual. Qualifed electricians should calculate battery-set parameters before setting.

6.6 Earth Connection(mandatory)

User can additionally earth the inverter to the enclosure of a second earthing or equipotential bonding if it is required by local safety. This prevents electric shock if the original protective conductor fails.

Note: If the PV end of the inverter is not connected with earth , the inverter will turn on a red light Inspect and report ISO Fault .This inverter complies with IEC 62109-2 clause 13.9 for earth fault alarm monitoring.

➢ Earth Connection Steps:

Step1. Strip the earthing cable insulation and insert the stripped cable into the ring terminal, then clamp it .

Step2. Place the ring terminal into the grounding rod and tighten the grounding screw with a screwdriver.

Step1

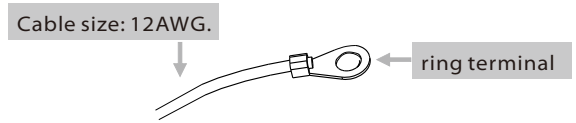

Step2

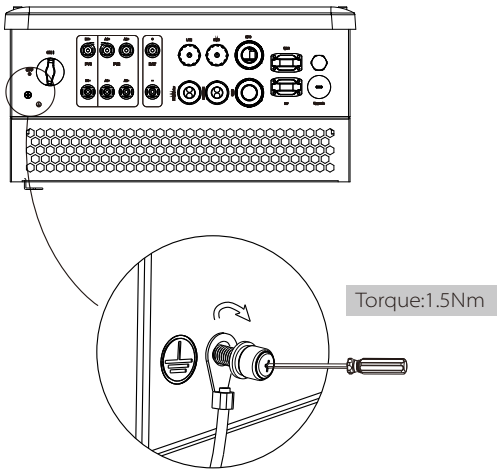

6.7 Meter Connection

Meter is used for monitoring the power usage for entire house, at the meantime, inverter will also need the data from Meter to achieve the Export Control Function.

> **Note**
> It is necessary to connect meter to inverter otherwise inverter will shutdown with a "Meter fault" alert.
> The smart meter must be authorized by Solax, any third party or non-authorized meter may not match with the inverter.
>
> Solax will not take the responsibility if the meter is unavailable.

➢ Meter connection diagram

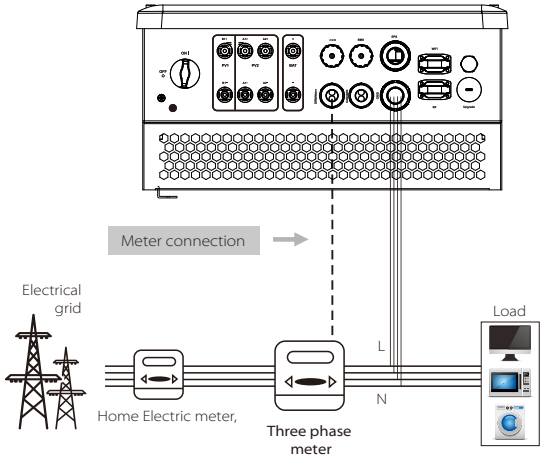

➢ Meter Interface

Communication interface bewteen inverter and meter is RS485 with two wires.

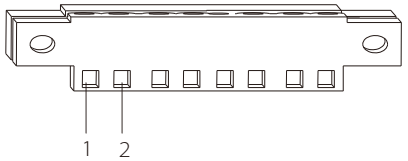

1	2	3	4	5	6	7	8
485A	485B	Shutdown	+3.3V	GND	EPS	GEN_A	GEN_B

Note:1, 2 are the function interface of electricity meter;3 and 4 are intelligent switch interfaces;5, 6 are parallel interface;7 and 8 are reserved interfaces.

➢ Meter Connection Steps:

Three phase inverter can work with several brands of meter, therefore please kindly noted here we only introduce the connection with inverter side. For the connection with meter side, please refer to the specified meter user manual.

Step1. Prepare a connector and two communication wires.

Step2. Unscrew the nut of Meter connector and insert two communication wires through it.

Step3. Trip the insulation from the communication wires, then insert one side of wires into the 8 pin green terminal which can be found in accessories package. (Torque:0.2±0.1Nm)

Step4. Insert the terminal into the corresponding meter terminal block inside of the inverter. Insert the other side of wires into corresponding meter ports. (Torque:0.4±0.1Nm)

Note:please make sure meterA and meterB is connected to port RS485A and RS485B on the meter.

Step1

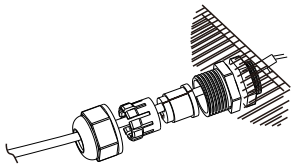

Step2

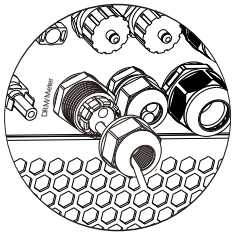

Step3

Torque:0.2±0.1Nm

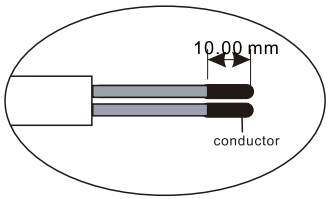

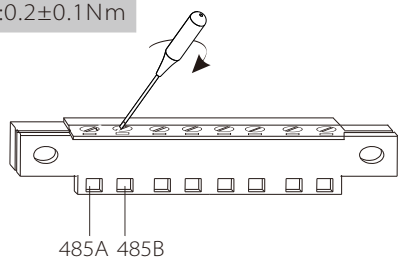

Step4

Torque:0.4±0.1Nm

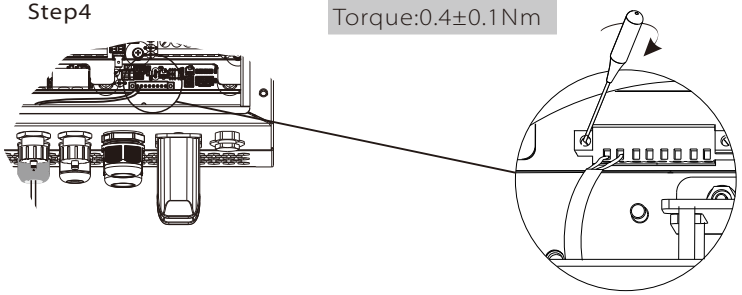

6.8 LAN Connection

LAN communication is the standard communication interface. It can transmit the data between the router and inverter via the local network.

➢ Application Occasion

This function is appliable for the below situation:
When the wifi signal is too weak to transmit data, user can use LAN port for the monitoring with a data cable.
Note: The wifi module can still be connected when using LAN connection.

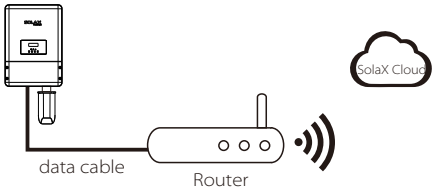

➢ LAN PIN Definition

Communication interface bewteen inverter and router is RS485 with a RJ45 connector.

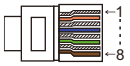

1	2	3	4	5	6	7	8
TX+	TX-	RX+	X	X	RX-	X	X

➢ LAN Connection Steps:

Please refer to BMS connection steps (page34) for LAN connection. Please kindly noted the PIN definition and port position will be slightly different.

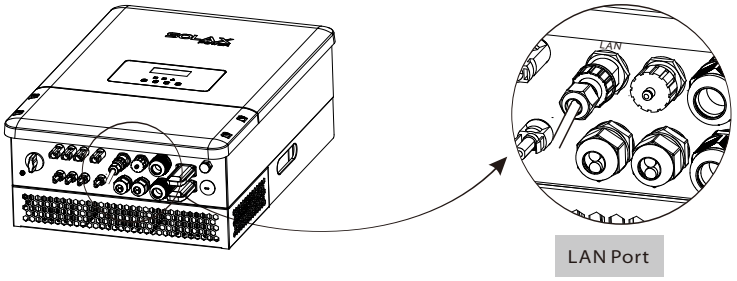

6.9 DRM Connection

DRM is provided to support several demand response modes by emitting control signals as below.

Mode	Requirement
DRM0	Operate the disconnection device
DRM1	Do not consume power
DRM2	Do not consume at more than 50% of rated power
DRM3	Do not consume at more than 75% of rated power AND Source reactive power if capable
DRM4	Increase power consumption (subject to constraints from other active DRMs)
DRM5	Do not generate power
DRM6	Do not generate at more than 50% of rated power
DRM7	Do not generate at more than 75% of rated power AND Sink reactive power if capable
DRM8	Increase power generation (subject to constraints from other active DRMs)

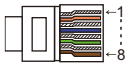

1	2	3	4	5	6	7	8
DRM1/5	DRM2/6	DRM3/7	DRM4/8	+3.3V	DRM0	GND	GND

Note: Only PIN6(DRM0) and PIN1(DRM1/5)are available now, and other PIN functions are being developed.

➢ DRM Connection Steps:

Please refer to Meter connection steps (page38-40) for DRM connection. Please kindly noted the PIN definition and port position will be slightly different.

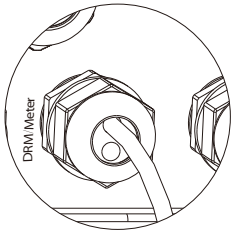

DRM/Meter Port

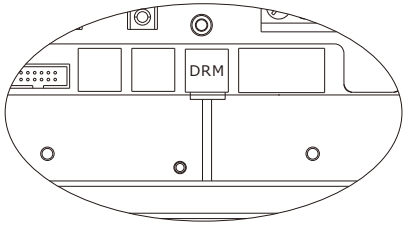

DRM Port: The third RJ45 port from left side

6.10 Monitoring Connection(optional)

Inverter provides a Monitoring port which can collect data from inverter and transmit it to monitoring-website via an external monitoring data collector. SolaX could provide three type monitoring data collector, and they are Pocket wifi, Pocket LAN and Pocket GPRS. User could choose an appropriate Pocket product according to network environment. (In order to better monitor the machine error, input and output power, it is recommended that customers buy this product)

➢ Pocket WiFi connection diagram

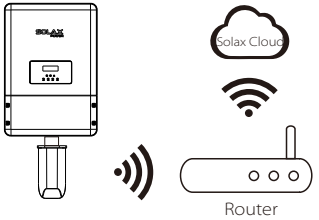

➢ Pocket GPRS connection diagram

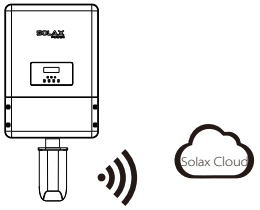

Please check the Pocket wifi user manual/Pocket GRPS user manual /4G user manual for more details.

6.11 Inverter Manipulation

➢ **Start inverter after checking all below steps:**

❶ Ensure the inverter fixed well on the wall.
❷ Make sure all the DC wirings and AC wirings are completed.
❸ Make sure the meter is connected well.
❹ Make sure the battery is connected well.
❺ Make sure the external EPS contactor is connected well. (if needed)
❻ Turn on the AC switch, EPS switch and battery switch.
❼ Turn on the DC switch at the bottom of the inverter to "ON" position.
❽ Long-press the "Enter" key for five seconds to exit Off Mode. (The mode is Off Mode when you use it for the first time)

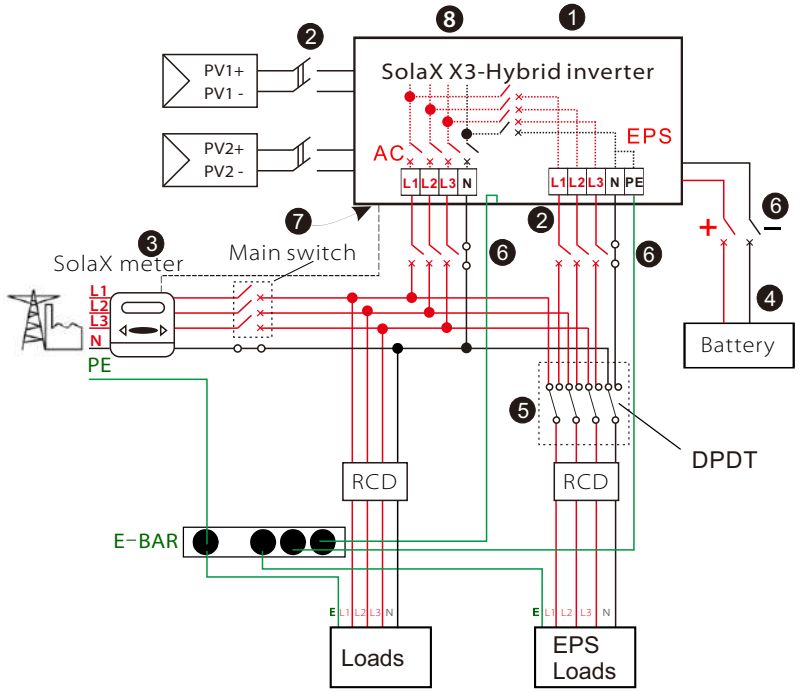

➢ **Check the inverter:**

Step1. Inverter will start up automatically when the PV panels generate enough energy or the battery is dicharging.
Step2. Check the status of indicators and LCD screen. The left indicator should be blue and the indicator screen should display the main interface.

> Note
> If the left indicator is not blue please check below points:
> - All the connection are correct.
> - All the external breakers are switched on.
> - The DC switch on the inverter is in the "ON" position.

Step3. There is a setting guide on the LCD screen if it is the first time to start up, pls follow it. For specific setting, please refer to section 8 (Setting).
Step4. Set WiFi according to wifi user manual.
Step5. Operate "Self Test". (if needed)

➢ **Self-test in accordance with CEI 0-21(applies to Italy only)**

The self-test is only required for inverters, which are commissioned in Italy. The Italian standard requires that all inverters feeding into the utility grid are equipped with a self-test function in accordance with CEI 0-21. During the self-test, the inverter will consecutively check the protection reaction times and values for overvoltage, undervoltage, overfrequency and underfrequency.

Selftest function is available at any time, and the test report will show on the LCD display for end-user.

➢ **Shut down the inverter :**

Step1. Press the "Enter" key for five seconds to enter Off Mode.

Step2. Turn off the AC switch, EPS switch and battery switch.

Step3. Turn off the DC switch at the bottom of the inverter to "OFF" position.

Step4. Wait 5 min before you open the upper lid.(if in need of repair)

7. Firmware Upgrading

User can upgrade inverter's firmware via an U-disk.

➢ Preparation

Please ensure the inverter is steadily powered on.
Inverter must connect PV panels and keep the battery on through whole procedure of upgrading.
Please prepare a PC and make sure the size of U-disk is under 32G,and the format is fat 16 or fat 32.

> **Warning!**
> Make sure the PV input power is more than 180V **(operate the upgrade on a sunny day)**, otherwise it may result in **serious failing** during upgrading.

➢ Upgrading Steps:

Step1. Please contact our service support to get the update files, and extract it into your U-disk as follow:
"update\ARM\618.00216.00_Hybrid_X3G3_R_Manager_VX.XX_XX-XX.usb";
"update\DSP\618.00215.00_Hybrid_G3X3_R_Master_VX.XX_XX-XX.hex";
(VX.XX is version number, xx-xx is file compilation date)

> **Warning!**
> Make sure the directory is in accordance with above form strictly!
> Do not modify the program file name, or it may cause the inverter is fail to upgrade!

Step2. Press the "Enter" key for 5 seconds to enter Off Mode. Then unscrew the waterproof lid and insert U-disk into the "upgrade" port at the bottom of the inverter.

Step3. The LCD will be shown as picture 3-1. Then press up and down to select the one that you want to upgrade and press "OK" to confirm to upgrade.

Step4. After the upgrade is finished, the LCD will display "succeed"(only for DSP upgrades), please remember to pull off the U-disk, screw the waterproof lid and press the "Esc" to return to the Main interface. Then press the "Enter" key to exit Off Mode.

Step2

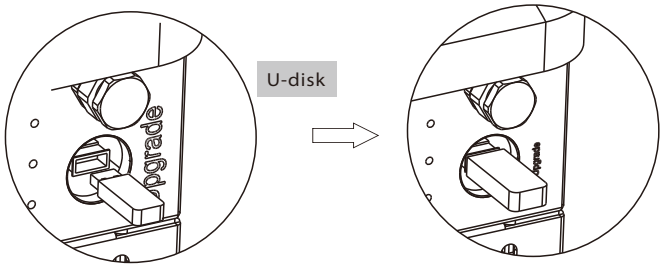

Step3

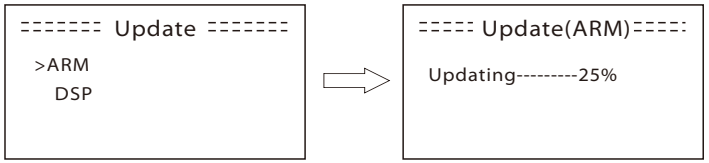

> **Warning!**
> If the upgrading is broken off during operation, please ensure the inverter is steadily powered on and reinsert the U-disk.

8. Setting

8.1 Control Panel

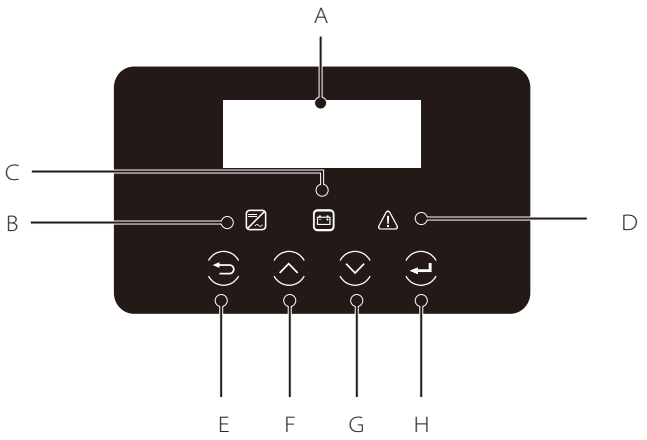

Object	Name	Description
A	LCD Screen	Display the information of the inverter.
B	Indicator LED	lit in blue: The inverter is in normal status or in EPS mode. flash in blue: The inverter is in waiting or checking status. Off: The inverter is in fault status.
C		lit in green: The battery communication is normal and working. flash in green: The battery communication is normal and in idle status. Off: The battery does not communicate with inverter.
D		lit in red: The inverter is in fault status. Off: The inverter has no errors.
E	Function Button	ESC button: Return from current interface or function.
F		Up button: Move cursor to upside or increase value.
G		Down button: Move cursor to downside or decrease value.
H		OK button: Confirm the selection.

8.2 Menu Structure please refer to the inverter for the most updated structure

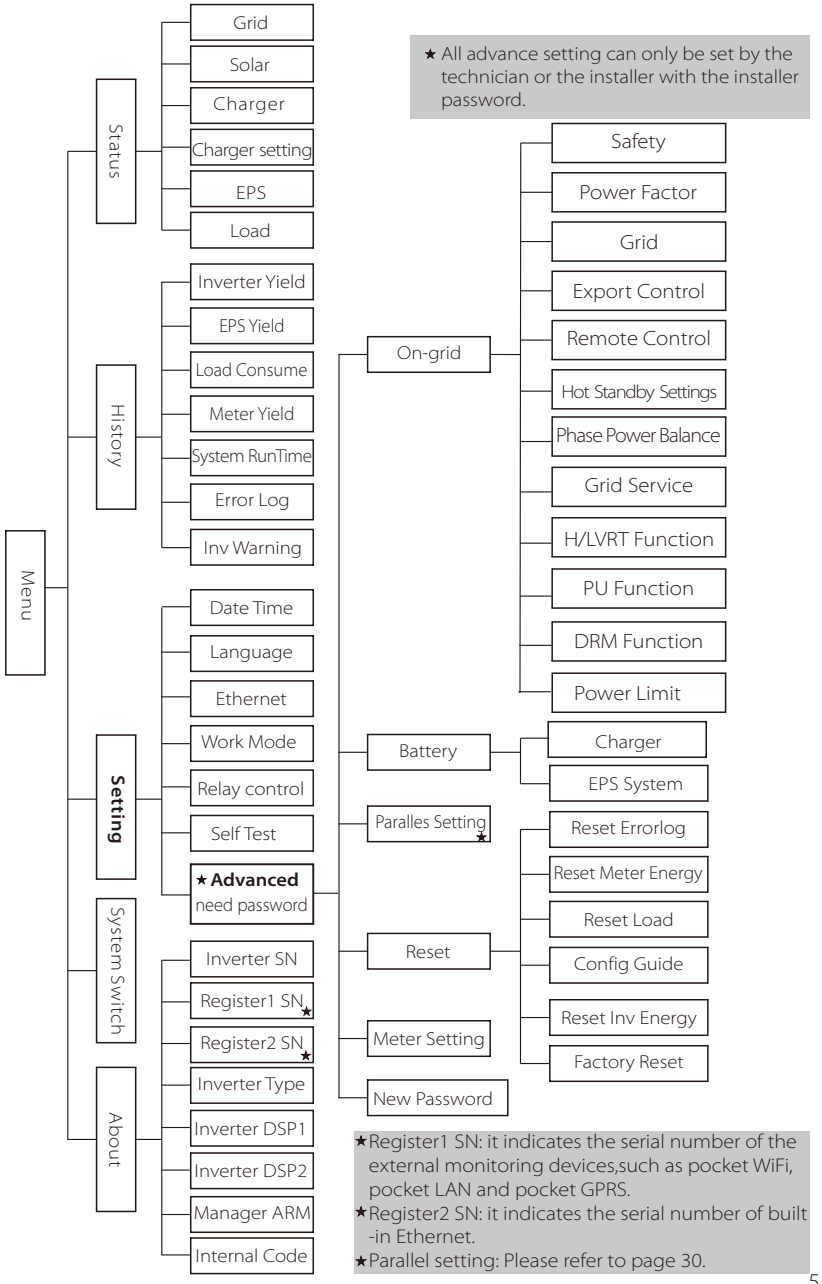

★ All advance setting can only be set by the technician or the installer with the installer password.

★Register1 SN: it indicates the serial number of the external monitoring devices,such as pocket WiFi, pocket LAN and pocket GPRS.
★Register2 SN: it indicates the serial number of built -in Ethernet.
★Parallel setting: Please refer to page 30.

8.3 LCD Operation

LCD Digital Display

The main interface is the default interface, the inverter will automatically jump to this interface when the system started up successfully or not operated for a period of time.

The information of the interface is as below. "Power" means the instant output power; "Today" means the power generated within the day. "Battery" means the left capacity of battery energy.

Power	0W
Today	0.0KWh
Battery	%
Normal	

Menu interface

The menu interface is a transfer interface for user to get into another interface to change the setting or getting the information.

-User can get into this interface by pressing "OK" button when LCD displays the main interface.

-User can select interface by moving the cursor with function button and press "OK" to confirm.

Menu
Status
History
Settings

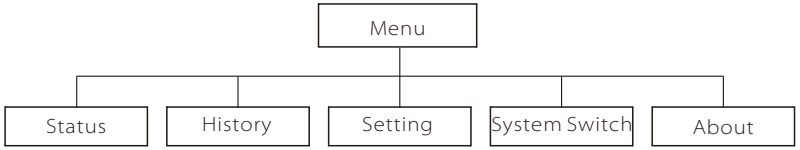

➢ Status

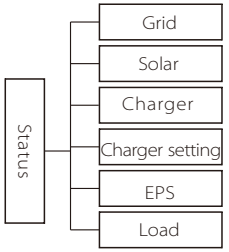

Status

The status function contains six items of the inverter(grid, solar, charger, Charger-Setting,eps and Load).

Press up and down to select and press "OK" to confirm the selection, press "ESC" to return to Menu.

Status
Grid
Solar
Charger

a) Grid

This status shows the current grid condition such as voltage, current, output power, the local consumed power and frequency.

Pout measures the output of inverter;

Pgrid measures power export to or import from grid.

Positive value means the energy feeds into grid, negative value means the energy used from the grid.

Grid	
Power Meter	1
Power Meter	2
Power Meter	3

InvState A	
>Ua	0.0V
Ia	0.0A
PaOut	0W

b) Solar

This status shows the real time PV condition of the system, such as input voltage, current and power situation of each PV input.

Solar	
U1	600.0V
I1	7.0A
P1	4200W

c) Charger
This status shows the charger situation of the system. Include the battery voltage, charge or discharge current. Charge or discharge power, battery capacity, battery temperature, BMS status, charge and discharge limit. "+" means in charging; "-" means in discharging.

Charger	
U	400.0V
I	-1.0A
P	-400W

d) Charger-Setting
Here you can see the parameters of the battery Settings (lithium battery and lead-acid battery).

Charger-Setting	
Min Capacity	10%
MaxChCur	19.0A
Max DisChCur	25.0A

Charger-Setting	
Charge Absorp	0,0V
Chargr Float Vot	0.0V
DischargeCUtVot	0.0V
Charge MaxCU	0.0A
Discharge MaxCU	0.0A

e) EPS
EPS will only have data when the inverter is working in EPS mode, it will show the real time data of the EPS output such as voltage, current, power.

EPS_S	
>PaS	0VA
PbS	0VA
PcS	0VA

EPS_State A	
>Ua	0.0V
Ia	0.0A
PaActive	0W

f) Load
If the inverter is plugged with a smart plug, this status shows the real time load power, include load1 power and load 2 power.

Load	
>L1 Power	0W

➢ History

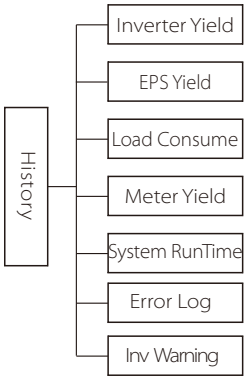

• History
The history function contains seven items of the information: Inverter yield, charger yield, EPS yield, load consume, feed in energy, system run time and error logs.
Press up and down to select and press "OK" to confirm the selection, press "ESC" to return to Menu.

History
Inverter Yield
>EPS Yield
Load Consume

a) Inverter Yield
This function contains inverter yield for today, yesterday ,this month ,last month and total.

Inverter Yield
>OutputGridToday
00.0KWh

b) EPS Yield
The EPS Yield function contains charger yield for today and total.

EPS Yield
>Today:
00.0KWh

c) Load consume
The Load consume contains the energy consumed by specific loads by today and total.

```
Load consume
>Load 1 consume
 Load 2 consume
```

d) Meter Yield
The Meter Yield contains four items: FeedInToday, FeedInTotal, ConsumeToday and ConsumeTotal.

```
Meter1 Yield
>FeedInToday:
                00.0KWh
```

e) System RunTime
This function contains grid mode run time and EPS mode run time.

```
System RunTime
>GridModeRunTime
                80.3H
```

f) Error Log
The Error logs record the lastest six error messages happened.

```
Error log
>No error
```

g) Inv warning
All warnings for the machine status are displayed here.

```
Inverter Warning
   No Warning
```


➢ Setting

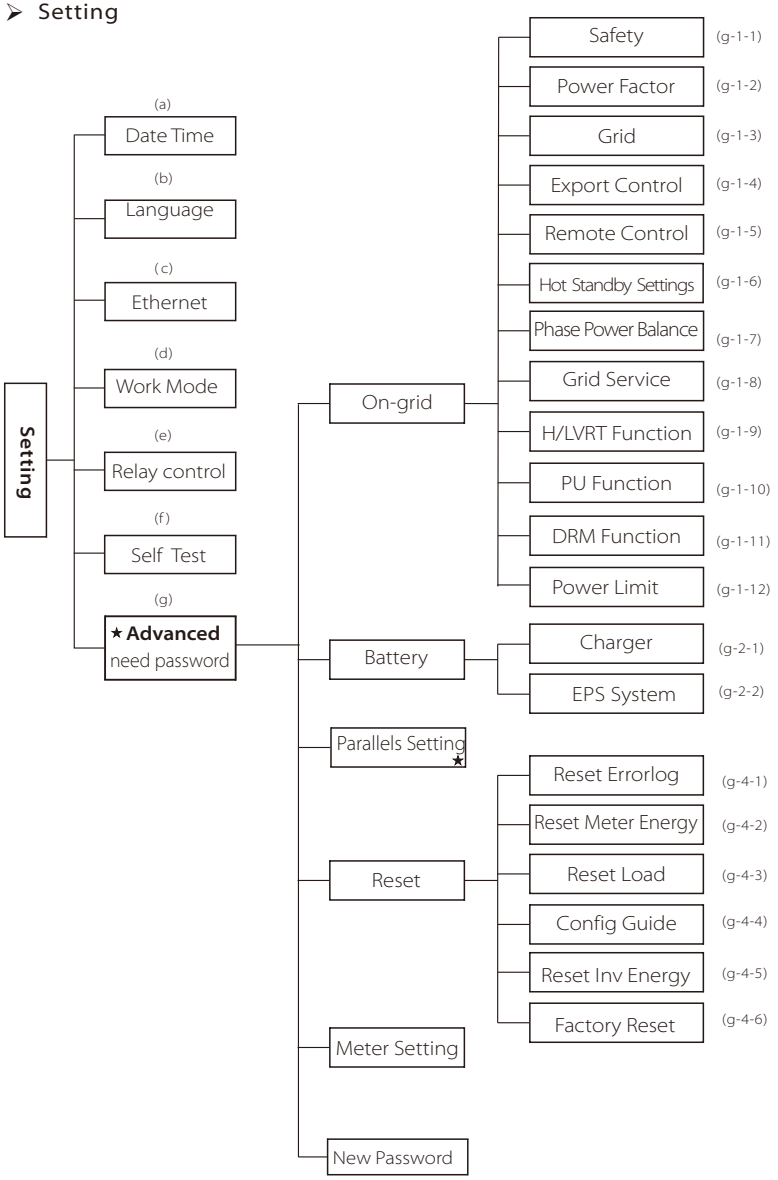

★Parallels setting: Please refer to page 38.

- Setting

This function is used for setting of the inverter time, connection, battery, grid and so on.
Enduser can set Date Time, Language and Ethernet directly.
But for advance setting, it requires installer password to operate most of the professional settings.

```
Setting
Date Time
Language
Ethernet
```

a) Date Time
This interface is for user to set the system date and time.

```
Date time
>2013 - 06 - 06
10 : 19
```

b) Language
This inverter provides several languages for customer to select.

```
Language
English
Deutsch
```

c) Ethernet
There are two modes to obtain IP address: static and DHCP.
User can set the information about ethernet such as IP address, subnet mask number and default gateway number and Mac address.

```
Ethernet
> IP Method
static
```


d) Work mode
There are 4 work modes for choice.
All these work modes is available for on-grid condition only:

Parameter	Comment
Self Use (default)	The PV generated power will be used to supply the local loads first, then to charge the battery. The redundant power will export to the public grid. When there is no PV supplied, battery will discharge for local loads first, and grid will supply power when the battery capacity is not enough. The priority of inverter output power is: supplying the load→charging the battery→feeding to the
Back Up Mode	Battery will stop discharging to keep higher capacity when the grid is on. when the power generated by PV is not enough, the battery will discharge to supply the local loads too. And if still not enough, the grid will power the local loads together. This work mode applies to the area where suffering from blackout regularly.
Feed in Priority	The priority of inverter output power is: feeding to the grid→ supplying the load → charging the battery. This work mode applies to the area with high feed-in tariff.
Force Time Use	In this work mode the charging and discharging time can be set flexibly, and it also allows to choose whether charge from the grid or not. Other time it follows the priority of Self Use mode.

- For "Force Time Use" mode, there are 2 parameters that needs to be set.

```
Work Mode
>Mode Select
Force time use
```

```
Work Mode
>Charger period 1
From Grid
Enable
```

```
Work Mode
>Charger period 2
From Grid
Enable
```

```
Work Mode
>  Charge
Start time 1
08:00
```

```
Work Mode
>  Charge
End time 1
08:00
```

```
Work Mode
>  Charge
Start time 2
08:00
```

```
Work Mode
>  Charge
End time 2
08:00
```

e) Relay Control

Relay Control is an optional function which can control designated load intelligently by consuming the surplus energy when feed in power reaches certain value.

This function can only be achieved with solax product "Smart Plug".

For specific operation, please refer to " Smart Plug user manual".

```
Relay Control

>Relay1 Setting
>Relay2 Setting
```

f)Self Test (applies to CEI 0-21 only)

The self test function allows user to test the following items."ALL test" , "Ovp(59.S2) test", "Uvp(27.S1) test", "Uvp(27.S2) test", "Ofp(81>.S1) test", "Ufp(81<.S1) test", "Ofp(81>.S2) test", "Ufp(81<.S2) test", "Ovp10(59.S1) test".

In the self test interface, user can test choose "ALL test" or individual test item.

Please make sure the inverter is grid-tied before testing test.

For all test, it needs about 6 minutes. And it will display"success" then "Pass" on the display.

For individual test item, it needs about several seconds or minutes.

Click test report to obtian all items test result.

```
Self Test
ALL Test
Test report
Uvp(27.S1) test
```

```
>Ofp2(81>.S2)result
Ft: 51.50Hz Tt:1000ms
Fs:  0.00Hz To: 998ms
F0:  0.00Hz    pass
```

```
>Ovp2(59.S2)result
Vt: 264.5V  Tt: 300ms
Vs:    0.0V To: 200ms
V0:    0.0V      pass
```

```
>Ofp2(27.S2)result
Vt:  92.0V  Tt: 200ms
Vs:    0.0V Tt: 196ms
V0:    0.2V   pass
```

```
>Uvp2(27.S1)result
Vt: 195.5V  Tt: 400ms
Vs:    0.0V To: 200ms
V0:    0.0V      pass
```

```
>Ofp2(81>S1)result
Ft:  50.50Hz  Tt: 100ms
Fs:   0.00Hz  To:  96ms
F0:   0.2Hz        pass
```

```
>Ufp2(81<.S1)result
Ft:  49.50Hz  Tt: 100ms
Fs:   0.00Hz  To:  98ms
F0:   0.02Hz       pass
```

```
>Ufp2(81<.S2)result
Ft:  47.50Hz  Tt: 400ms
Fs:   0.00Hz  To: 3999ms
F0:   0.02Hz       pass
```

```
>Ovp10(59.S1)result
Vt:  253.0V  Tt: 600ms
Vs:    0.0V  To: 598ms
V0:    0.0V      pass
```


g) Advanced

All the advance setting can be set here, such as battery, grid, EPS and so on. "Advanced" is divided four parts: On-grid, Battery, Reset, User-define. And every part has lower level parts.

Pls contact with your installer or factory for the installer password to enter.

```
Advanced
 On-grid
>Battery
 Paralles Setting
```

* Please note that when inverter has DSP communication failed, all the advanced setting will be hidden and invalid expect battery awaken.

```
Advanced
DSP-COMM failed
>Battery
```

```
Charger
>Battery Awaken
        NO
```

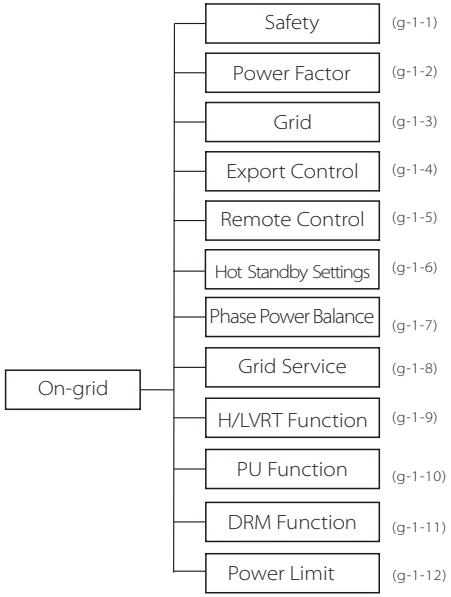

g-1-1) Safety

User can set safety standard according to different countries and grid tied stanndards.There are 8 standards to select. (May change without notice)

Item	Standard	Country
1	VDE 0126	German
2	ARN 4105	German
3	AS 4777	Australia
4	G98/2	UK
5	EN 50438_NL	Netherland
6	CEI 0-21	Italy
7	IEC61727_In	India
8	EN 50549_EU	Netherland

g-1-2) Power Factor (For specific country if required by the local grid.)

There are 5 modes for selecting: Off , Under-Excited, Over-Excited, Curve, Q(u).
(May be changed or added without notice)
User press up and down key to select, press enter key to confirm.

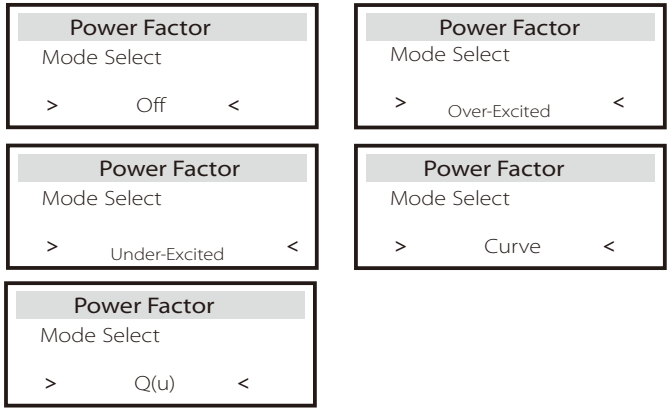

Mode	Comment
Off	–
Over-Excited	PF value
Under-Excited	PF value
Curve	Upper limit
	Lower limit
	Power Upper
	Power Lower
	PFLockInPoint (CEI 0-21 only)
	PFLockOutPoint (CEI 0-21 only)

Q(u)	VoltRATIO 1 (AS4777.2 only)
	VoltRATIO 4 (AS4777.2 only)
	QURESPONSEV2 (AS4777.2 only)
	QURESPONSEV3 (AS4777.2 only)
	QURESPONSEV4 (AS4777.2 only)
	K Value (CEI 0-21 only)
Fixed Q Power	Q Power

Reactive power control, Reactive standard curve cos φ = f(P)

For VDE ARN 4105, curve cos φ = f(P) should refer to curve B. default value of setting is as shown in curve B.

For E 8001, curve cos φ = f(P) should refer to curve A. default value of setting is as shown in curve A.

For CEI 0-21, default value of PFLockInPoint is 1.05, when Vac > 1.05Vn, and Pac> 0.2 Pn, curve cos φ = f(P) should refer to curve B. Default value of PFLockOutPoint is 0.98, when Vac < 0.98 Vn, cos φ = f(P) will exit curve B.

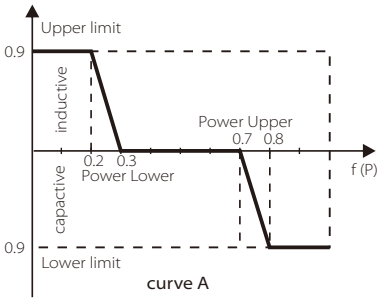

curve A

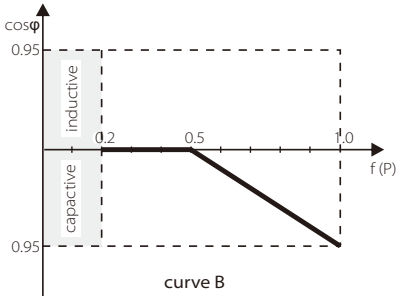

curve B

Reactive power control, Reactive standard curve Q= f(V)

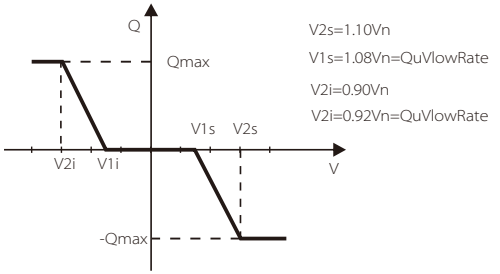

g-1-3) Grid

The enduser do not need to set the grid parameters. All default value has set on factory according to safety rules.

If need to reset, any changes should according to the requirement of local grid.

Parameter	Comment
Normally	
Vac upper	Voltage high protect
Vac lower	Voltage low protect
Vac upper slow	Voltage high slow protect
Vac lower slow	Voltage low slow protect
Fac upper	Frequency high protect
Fac lower	Frequency low protect
Fac upper slow	Frequency high slow protect
Fac lower slow	Frequency low slow protect
Vac 10m avg	10 min voltage high protect
Apply to Italy(CEI0-21) only.	
Ovp(59.S2)	Overvoltage protect fast time
Uvp(27.S2)	Undervoltage protect fast time
Ofp2(81 > .S2)	Overfrequency protect fast time
Ufp2(81 < .S2)	Underfrequency protect fast time
Ovp(59.S2)	Overvoltage protect slow time
Uvp(27.S1)	Undervoltage protect slow time
Ofp(81 > .S1)	Overfrequency protect slow time
Ufp(81 < .S1)	Underfrequency protect slow time
UFPL_StartPoint	Under Frequency power limit start point
OFPL_StartPoint	Over Frequency power limit start point
Apply to EN50438_NL only.	
OFPL_StartPoint	Over Frequency power limit start point
FreqDropRate	Frequency droop rate
Apply to EN50438_DK only.	
OFPL_StartPoint	Over Frequency power limit start point
T_Start	checking time set
FreqDropRate	Frequency droop rate
Apply to NZS4777.2 only.	
W(Gra)	Precentage of rated power per minute
Apply to EN50549_EU only.	
OFPL_StartPoint	Over frequency power limit start point
T_Start	checking time set
FreqDropRate	Frequency droop rate
UFPL_StartPoint	Under frequency power limit start point
UFPL_Setting	Under frequency power limit switch set
OFPL_Setting	Over frequency power limit switch set

W(Gra) (applies to NZS4777.2)

W(Gra) is Gradient of power rate limit which is required by standard NZS4777.2 and applies to NZS4777.2 only. This funciton is defined as a precentage of rated power per minute.

The default value is "enable". Choose "disable" means the function is turned off.

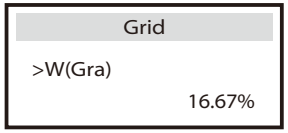

g-1-4) Export control

This function allows the inverter able to control energy exported to the grid.

There are user value and factory value. The factory value is default which can not be changed by user. The user value setting by installer must be less than the factory value.The meaning of the set number is the max. output power allowed. If the user do not want feed any power into grid, then please set it to 0.

g-1-5) Remote control

This function allows external control device to make the inverters remote cluster control through LAN port on the inverter. And it can control the inverter's active power output and reactive power output.

The default value is "Disable". If it can connect successfully, it will display "Connected". If not, it will display "Connecting". Select "Disable" means the function is turn off.

g-1-6) Hot standby setting

This function allows the inverter to connect the battery and power general standby, detection of load access, no need for inverter self-check, direct and fast work.

The default value is "Enable". Select "Disable" means the function is turn off.

g-1-7) Phase Power Balance

This function controls the distribution of AC output power.

"Enable" means each phase will be divided according to the loads connected with each phase. "Disable" means each phase power will be divided equally and "disable" is the fefault setting value.

Phase Power Balance
Function Control
>Disable<

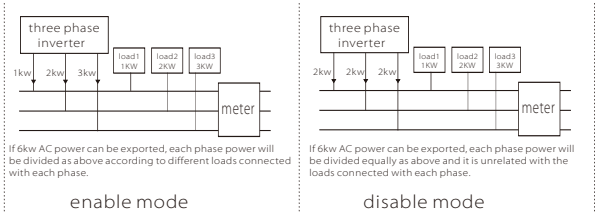

enable mode disable mode

g-1-8) Grid Service

Grid Service can be selected from "Sustain" or "Stop" . The default is "Sustain".

Every country's requirements for the safety of battery storage inverter is different. some may be opposite to the rights of the user. User can select "Stop" to turn off these features if user receives legal permission.

Grid Service
Function Control
>Sustain<

g-1-9) H/LVRT Function

When the grid appears unusual situation in a very short time, this function can make the inverter keeping in a no-power and no-alarm situation in this short time and will make the inverter resume normal work immediately once the grid is normal.

The effctive time is 800ms default, but it will be different according to choose different safety.

Choose "Enable" means this function is turned on and it is the default value.

Choose "Disable" means the function will be shut off.

H/LVRT Function
Function Control:
Enable

g-1-10) PU Function(For specific country if required by the local grid)

PU function is volt-watt response mode which is requried by some specific country standard such as AS4777.2. This function can control the inverter's active power according to grid voltage.

Choose "Enable" means this function is turned on and it is the default value.

Choose "Disable" means the function will be shut off.

PU Function
>PuFunction
Enable

PU Function
Response V2
220.0V

PU Function
Response V3
250.0V

PU Function
Response V4
265.0V

g-1-11) DRM Function(applies to NZS4777.2)

DRM function is Demand Response Mode which is required by standard NZS4777.2 and applies to NZS4777.2 only.

The default value is "enable". Choose "disable" means the function is turned off.

DRM Function
>Function Control
Enable

g-1-12)Power Limit

Power limit function is able to set AC port maximum power by percentage.

Power Limit
>Proportion
1.00

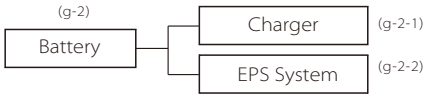

g-2-1) Charger

Here the user can set the parameters of charger on this page, the inverter is compatible with both lithium battery and lead-acid battery. Users can set the charge & discharge parameters and awaken mode.
For the detailed parameters , please refer to below table.

For Lithium battery

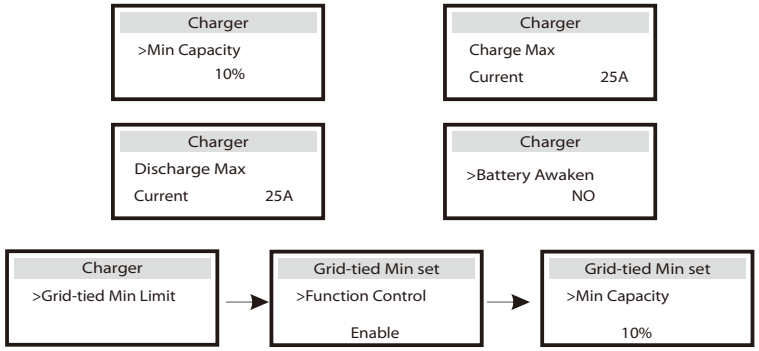

For Lead-acid-battery

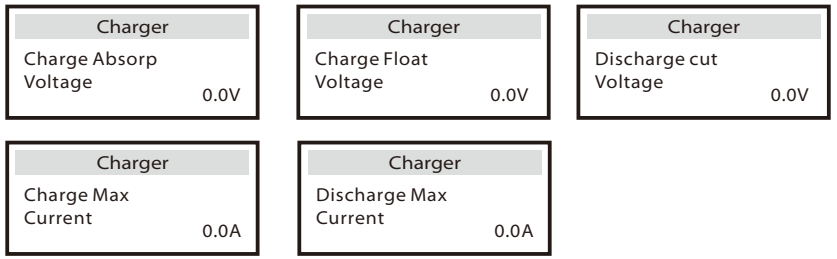

When the battery voltage reachs the value(discharge cut voltage for lead-acid battery, min capacity for lithium battery) in on-grid mode(no PV power), battery will stop discharging and the system will go into ILDE mode.
When the battery voltage reachs this value(discharge cut voltage for lead-acid battery, min capacity for lithium battery) in off-grid mode, battery will stop discharging and the inverter will stop exporting power from EPS port with showing "BAT power low" on LCD display.
There are two ways to exit from "BAT power low".
-Press ESC button can exit from "BAT power low" manually.
-Enter EPS system setting page(refer to g-2-2 section) to exit from "BAT power low" automatically.

*Battery Awaken
-When the battery is low, you need to manually set the Battery Awaken function -- start the Battery Awaken:
· Inverter will charge the battery when the PV input power> 1KW or inverter is connected to the grid.
· Inverter will exit the Battery Awaken when battery voltage > discharge cut-off voltage + 10V or Battery Awaken last > 2 hours.
-When inverter is in normal operation, and the battery power is sufficient, start the Battery Awaken function, the inverter will exit the Battery Awaken automatically.

Parameter	Comment
Min capacity *	The remaining minimum capacity of the battery.
Charge Max Current	The charge current can be set for 0-25A.
Discharge Max Current	The discharge current can be set for 0-25A.
Battery Awaken	When the battery voltage drops too low to work, choose this option "Yes" to make battery charging from PV or grid forcbily.
Charge Absorp Voltage	When charging begins, it will enter constant votlage charging mode in order to accelerate charging speed. Please calculate this value based on lead-acid characteristic parameter.
Charge Float Voltage	It will switch to float charging mode after exiting constant voltage charging mode. Please calculate this value based on lead-acid characteristic arameter.
Discharge Cut Voltage	When the battery voltage reachs this value in on-grid mode(no PV power), battery will stop discharging and the system will go into ILDE mode.When the battery voltage reachs this value in off-grid mode, battery will stop discharging and the inverter will stop exporting power from eps port with showing "BAT power low" on LCD display.
Charge Max Current	Please calculate this value based on lead-acid characteristic parameter and inverter maximum charge current limination.
Discharge Max Current	Please calculate this value based on lead-acid characteristic parameter and inverter maximum discharge current limination.

NOTE !
Please confirm the Inverter setting for maximum charge/discharge current is within the range of battery rated charge/discharge current.

g-2-2) EPS system (For E Version only)
X3-Fit inverter with E Version can work on the EPS mode.
EPS parameters can be set as below.
"Mute"means you can set the warning of system which has entered EPS mode.
-"No"means there will be a buzzing and it is the default value.
-"Yes"means you choose to shut down the warning function.
Besides ,if the buzzing is sharp, it means EPS output is "over loads."
Frequency "here can be set 50Hz or 60Hz please based on correlative loads.

"EPS auto restart" is used for restarting EPS output power manually or automatically.
When the battery capacity reachs to min capacity or battery voltage reachs discharge cut voltage in off-grid mode, battery will stop discharging and the inverter will stop exporting power from eps port with showing "BAT power low" on LCD display.
- Choose "disable" means the EPS output power can only be restarted by pressing ESC button manually and it is the default value.
- Choose "enable" means the EPS output power can be restarted automatically through setting the "Min ESC Volt" (for lead-acid battery) or "Min ESC Soc" (for lithium battery).

For example, if user chooses "enable" and set "Min ESC Soc" to 20%, it means PV will charge the battery and when battery capacity reachs 20%, inverter will restart EPS output power and" BAT Power low" will disappear.

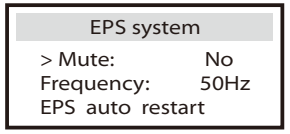

for lithium battery

for lead-acid battery

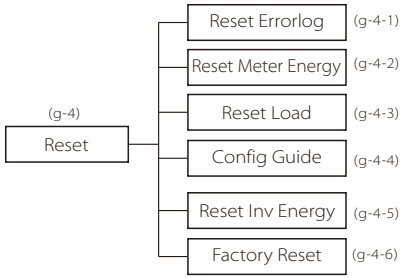

g-4-1) Reset Errorlog
User can reset all inverter errorlog record here.

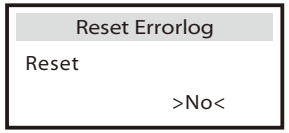

g-4-2) Reset Meter Energy
User can reset the meter energy record here.

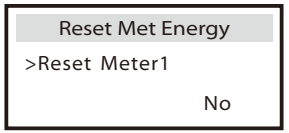

g-4-3) Reset Load
User can reset the specific load's energy if the inverter is installed with a smart plug.

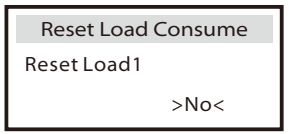

g-4-4) Config guide
This interface will trigger the initial setting guide re-play again.

Config Guide
>Start

g-4-5) Reset Inv energy
Use can reset all inverter errorlog record here.

Reset Inv Energy
>Reset
NO

g-4-6) Factory reset
Here you can reset the machine to the factory state.

Fcatory Reset
>Factory Reset
NO

(g-5)

Meter Setting

g-5) Meter Setting

X3-Hybrid inverter need to work with Energy meter to achieve hybrid functions. User also can turn off meter function so that X3-Hybrid inverter can work as normal grid-tied inverter without meter connected.
In hybrid system, if there is other power device in the system which is also wanted to be monitored, It can install two meters to monitor both solax inverter and other power device. These two meters need to be set different to address. Address 001 and address 002 are default and will be written to meters in factory. So user do not need to change the address except specific situation.

MeterSetting
>MeterFunction
Disable

MeterSetting
>Meter1Addr
1

MeterSetting
>Meter2Addr
2

g-6) New Password
User can set the new password here.

➢ System Switch

"System Switch" can be selected from "ON" or "OFF".
"ON" means the inverter is on working condition and it is inverter default status.
"OFF" means the inverter stop delivering all power, but the LCD remains on.

System Switch
>Switch
ON

Long press "Enter" key can also switch on "System Switch" "ON" or "OFF".

Do you want to
Switch on the device
> ON

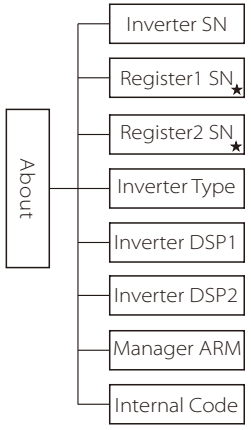

★Register1 SN: it indicates the serial number of the external monitoring devices,such as pocket WiFi, pocket LAN and pocket GPRS.
★Register2 SN: it indicates the serial number of built -in Ethernet.

➢ About

This interface shows information of the inverter including inverter serial number, Register1 serial number, Register2 serial number, inverter type, master DSP1,manager ARM and internal code.

About
>Inverter SN:
X3fit123456

About
>Register1 SN:
NA

About
>Register2 SN:
SP1EASKWPM

9. Troubleshooting

9.1 Trouble shooting

This section contains information and procedures for solving possible problems with X3-Hybrid inverters, and provides you with troubleshooting tips to identify and solve most problems that could occur with the X3-Hybrid inverters.
This section will help you narrow down the source of any problems you may encounter. Please read the following troubleshooting steps.
Check warnings or fault messages on System Control Panel or Fault codes on the inverter information panel. If a message is displayed, record it before doing anything further.
Attempt the solution indicated in below table.

Faults	Diagnosis and solution
AC10M Volt Fault	The grid voltage is out of range for the last 10 Minutes. • The system will back to normal if the grid is back. •Or seek help from installer.
AC HCT Fault	AC Current Sensor Fault • Turn off the PV, battery and grid , reconnect them. •Or seek help from installer, if can not go back to normal state.
BatPowerLow	• Turn off high power device , press "ESC" to restart the inverter. • Please charge the battery to a level greater than the protection capacity or the protection voltage.
Bat Volt Fault	Battery Voltage Fault • Check if the battery input voltage.is within the normal range • Or seek help from installer.
BMS_CellImblance	Battery CellImblance Fault • Please contact battery suppiler.
BMS_ChargeOCP	Battery Fault-charge overcurrent fault • Please contact battery suppiler.
BMS_CurrSensor Fault	Battery CurSen Fault • Please contact battery suppiler.
BMS_DischargeOCP	Battery Fault-discharge overcurrent fault • Please contact battery suppiler.

Faults	Diagnosis and solution
BMS_External_Err	Battery Fault-external fault • Please contact battery suppiler.
BMS_Hardware Protect	Battery Hardware Protect Fault • Please contact battery suppiler.
BMS_Internal_Err	Battery Fault-internal fault • Please contact battery suppiler.
BMS_Insulation Fault	Battery ISO Fault • Please contact battery suppiler.
BMS_Interlock Fault	Battery Interlock Fault • Please contact battery suppiler.
BMS_LowerVoltage	Battery Fault-undervoltage fault • Please contact battery suppiler.
BMS_OverVoltage	Battery Fault-overvoltage fault • Please contact battery suppiler.
BMS_Relay Fault	Battery Relay fault •Please contact battery suppiler.
BMS_TempSensor Fault	Battery TempSen Fault • Please contact battery suppiler.
BMS_TemHigh	Battery Fault-over-temperature fault • Please contact battery suppiler.
BMS_VoltSensor Fault	Battery VolSen Fault • Please contact battery suppiler.
DCI OCP Fault	DCI over current protection Fault. • Wait for a while to check if back to normal. • Or seek help from installer.
DCV OVP Fault	DCV EPS over voltage protection Fault. • Wait for a while to check if back to normal. • Or seek help from installer.
DSPunmatched	DSP Version Fault. • Please check if the DSP1 version is matched. • Or seek help from installer, if can not back to normal.
DSP System Fault	System Fault • Or seek help from installer, if can not go back to normal state.
EPS Relay Fault	EPS Relay Fault • Disconnect PV+ , PV- , grid and battery, reconnect them. • Or seek help from installer, if can not go back to normal state.

Faults	Diagnosis and solution
NTC Sample Invilad	NTC Sample Invilad •Please confirm whether NTC sampling is installed correctly and connected, and whether NTC sampling is intact. •Please confirm whether the installation environment is normal •Or seek help from installer, if can not go back to normal state.
EPS OCP Fault	Over Current in EPS Mode. • Make sure the load power is within the EPS power range. • Check if any nonlinear load is connect on the EPS. Remove this load to check if can recover. • Or seek help from installer, if can not go back to normal state.
Grid Freq Fault	Grid Frequency Out of Range • System will reconnect if the utility is back to normal. • Or seek help from installer.
Grid Relay Fault	GRID Relay Fault • Disconnect PV+ , PV- , grid and battery, reconnect them. • Or seek help from installer, if can not go back to normal state.
Grid Volt Fault	Grid Voltage Out of Range • Please wait for a while and system will reconnect if the utility is back to normal. • Please check whether the grid voltage is in the normal range. • Or seek help from installer.
InterComms Error	Mgr InterCom Fault • Turn off the PV, battery and grid , reconnect them. • Or seek help from installer, if can not go back to normal state.
Inter Com Fault	Internal Communication Fault • Turn off the PV, battery and grid , reconnect them. • Or seek help from installer, if can not go back to normal state.
Input Cnf Fault	PV Panel connection abnormal • Check if two MPPTs connect in a parallel mode. Please connect the two MPPTs indepedently. • Or seek help from installer, if can not go back to normal state.
Inv EEPROM Fault	Inverter EEPROM Fault • Turn off the PV, battery and grid , reconnect them. • Or seek help from installer, if can not go back to normal state.
Isolation Fault	Isolation Fault • Please check if the insulation of electric wires are damaged. • Wait for a while to check if back to normal. • Or seek help from installer.
Meter Fault	Meter Fault. • Please check if the meter is in normal working. • Or seek help from installer, if can not back to normal.
Mgr EEPROM Fault	Manager EEPROM Fault. • Turn off the PV, battery and grid , reconnect them. • Or seek help from installer, if can not back to normal.

Faults	Diagnosis and solution
OverLoad Fault	Over Load in EPS Mode. •Turn off high power device , press "ESC" to restart the inverter. • Or seek help from installer, if can not go back to normal state.
PLL_OverTime Fault	PLL_OverTime Fault • Please check whether the AC connection is correct. • The system will back to normal if the grid is normal. • Or seek help from installer, if can not go back to normal state.
Parallel Fault	Parallel Fault •Parallel system has two or more master machine. •The DSP1 version is different. • Or seek help from installer, if can not go back to normal state.
PV Volt Fault	PV Voltage Out of Range •Check the output voltage of the PV panels. • Or seek help from installer.
RCD Fault	Residual Current Device Fault • Check the impedance of DC input and AC output. • Disconnect PV+ , PV- and battery, reconnect them. • Or seek help from installer, if can not go back to normal state.
RC OCP Fault	Residual Current over current protection Fault. • Check the impedance of DC input and AC output. • Wait for a while to check if back to normal. • Or seek help from installer.
SW OCP Fault	Over current fault detected by software. • Wait for a while to check if back to normal. • Turn off the PV, battery and grid , reconnect them. • Or seek help from installer.
Temp Over Fault	Temperature over the limitation • Check if the envirement temperature is over limitation. • Or seek help from installer.
TZ Protect Fault	Over current Fault. • Wait for a while to check if go back to normal status. • Disconnect PV+ , PV- and battery, reconnect them. • Or seek help from installer, if can not go back to normal state.

● If your inverter's information panel is not displaying a Fault light, check the following list to make sure that the present state of the installation allows proper operation of the unit.

— Is the inverter located in a clean, dry, adequately ventilated place?
— Have the DC input breakers been opened?
— Are the cables adequately sized and short enough?
— Are the input and output connections and wiring in good condition?
— Are the configurations settings correct for your particular installation?
— Are the display panel and the communications cable properly connected and undamaged?

Contact SolaX Customer Service for further assistance. Please be prepared to describe details of your system installation and provide model and serial number of the unit.

9.2 Routine Maintenance

Inverters do not need any maintenance or correction in most condition,but if the inverter often loses power due to overheating,this can be the following reason:

● The cooling fins on the rear of house are coverd by dirts.

Clean the cooling fins with a soft dry cloth or brush if necessary.

Only trained and authorized professional personnel who are familiar with the requirements of safety was allowed to perform servicing and maintenance work.

➢ Safety checks

Safety checks should be performed at least every 12 months, please contact manufacturer to arrange qualified person who has adequate training,kownledge, and practical experience to perform these tests.(Please kindly noted this action is not covered by warranty).The data should be recorded in an equipment log.If the device is not functioning properly or fails any of test,the device has to be repaired.For safety check details ,refer to this manual,section 2 Safety instruction and EC Directives.

➢ Maintain Periodically

Only qualified person may perform the following works.

During the process of using the inverter,the manage person shall examine and maintain the machine regularly.The concrete operations are follow.

1: Check that if the cooling fins on the rear of house are covered by dirts, and the machine should be cleaned and absorbed dust when necessary.This work shall be check time to time.

2: Check that if the indicators of the inverter are in normal state,check if the keys of the inverter are in normal state,check if the display of the inverter is normal.This check should be performed at least every 6 months.

3: Check that if the input and output wires are damaged or aged.This check should be performed at least every 6 months.

4: You should keep the inverter panels clean and their security checked at least every 6 months.

10. Decommissioning

10.1 Remove the Inverter

- Disconnect the inverter from DC Input and AC output.
- Wait for 5 minutes for de-energizing.
- Disconnect communication and optional connection wirings.
- Remove the inverter from the bracket.
- Remove the bracket if necessary.

10.2 Packaging

Please pack the inverter with the original packaging.

If the original package is no longer available, you can also use an equivalent carton that meets the following requirements.

- Suitable for loads more than 45 kg.
- With handle.
- Can be fully closed.

10.3 Storage and Transportation

Store the inverter in a dry environment where ambient temperature keep always between -20 ℃ - +60 ℃. Take care of the inverter during the storage and transportation,keep less than 4 cartons in one stack.

When the inverter or other related components need to be disposed. Have it carried out according to local waste handling regulations. Please be sure to deliver wasted inverters and packing materials to certain site, where can assist relevant department to dispose and recycle.

11 Disclaimer

The X3-Hybrid series hybrid inverters are transported, used and operated under limited condition, such as environmental, electrical etc. SolaX shall not be liable to provide the service, technical support or compensation under conditions listed below, including but not limited to :

- Inverter is damaged or broken by force majeure (such as earthquake, flooding, thunderstorm, lighting, fire hazard, volcanic eruption etc).
- Inverter's warranty is expired and doesn't buy extended warranty.
- Can't provide the inverter's SN, warranty card or invoice.
- Inverter is damaged by man-made cause. Inverter is used or operated against any items in local policy.
- Inverter's installation, configuration, commissioning doesn't follow the requirements mentioned in this manual.
- Inverter is installed, refitted or operated in improper ways mentioned in this manual without authority from SolaX.
- Inverter is installed, operated under improper environment or electrical condition mentioned in this manual without authority from SolaX.
- Inverter is changed, updated or disassembled on hardware or software without authority from SolaX.
- Obtain the communication protocol from other illegal channels.
- Build monitoring, control system without authority from SolaX.
- Connect to other brands batteries without authority from SolaX.

SolaX will keep right to explain all the contents in this user manual.