AM-5+

LFP (LiFePO4) BATTERY MANUAL

+ **SETTINGS**
+ **COMMUNICATION**
+ **TROUBLESHOOTING**

Table of Contents

1. IMPORTANT INFORMATION 1
1.1.1 Manual Explanation 1
1.1.2 Warning 1
1.1.3 Safety 1
1.1.4 Warning 1
1.1.5 High Currents 1
1.1.6 Inverter Setup 1
1.1.7 3rd Party Interfacing Devices Not Allowed 1
2. INTRODUCTION 2
3. TYPICAL APPLICATION 2
4. TECHNICAL SPECIFICATIONS 3
5. PRODUCT OVERVIEW 4
5.1 Packaging Content 4
5.2 Wiring Interface 5
5.2.1 Legends 5
5.3 Wiring Interface Description 6
5.3.1 Battery Terminals 6
5.3.2 BMS Interface 6
5.3.3 Cloudlink Interface 7
5.3.4 Cloudlink Buttons 7
5.3.5 Cloudlink Communication Ports 7
6. AM-5+ DIP SWITCH SETTINGS 8
7. PARALLELING BATTERIES GENERAL INFORMATION 9
7.1 Parallel Battery Requirements 9
7.2 Power Cables 9
7.2.1 Paralleling Of Batteries Using Cables 9
7.2.2 Paralleling Of Batteries Using Busbars 9
8. INSTALLATION 10
8.1.1 Unpack the battery and check the condition 10
8.1.2 Positioning 10
8.1.3 First Power Up Check 10
8.1.4 Configuration Mode 11
8.1.5 Connecting to the RIOT CloudLink 11
8.2 Mounting the Bracket 12
8.3 Single Battery Installation 13
8.4 Parallel Connected Batteries 13
8.4.1 Batteries connected in parallel using a busbar system. 13
8.4.2 Mount the DC Isolating Device 13
8.4.3 Mount/Install the Rest of the Power System Components 13
8.4.4 Connect the Battery Cables 13
8.4.5 Configure the Battery DIP Switches 14
8.5 Communication Cable Connection 15
8.5.1 Inverter BMS CAN to Battery CAN/Inverter BMS 485 to Battery 485 cable. 15
8.5.2 Battery Parallel Link Cable: 15
8.5.3 Can Terminator: 15

8.5.4 Single AM-5+ Battery Communications Wiring 16
8.5.5 1 x AM-5+ Battery 16
8.5.6 2 x AM-5+ Batteries 16
8.5.7 15 X AM-5+ Batteries 16
8.6 Connecting The New AM-5+ Battery with Existing Installation Of AM-5 Batteries 17
8.6.1 1 x AM-5 connected to 1 x AM-5+ 18
8.6.2 2 x AM-5 connected to 1 x AM-5+ 18
8.6.3 2 x AM-5 connected to 2 x AM-5+ 19
9. OPERATING 20
9.1 Battery First Turn On 20
9.2 Turn On the System 20
9.2.1 Turn On Procedure 20
9.3 Configure The Inverter Battery Settings 21
9.4 Turning The System Off 21
10. CLOUDLINK SETUP 22
10.1 Connecting Using Your Mobile Device 22
10.2 Configuration Mode 22
Step 2: Connecting to the RIOT CloudLink 22
11. BATTERY LIGHT BAR DISPLAY 24
12. BATTERY INDICATORS AND BUZZER 25
12.1 BMS Battery Indicators 25
13. CLOUDLINK INDICATORS 26
13.1 CLOUDLINK INDICATORS 26
14. DETAILED BMS FUNCTIONS 27
14.1 Buzzer 27
14.2 Charge Current Limiter 27
14.3 Cloudlink 27
14.4 Communication Interface Ports 27
14.5 Dry Contact 28
14.6 Protection 28
14.7 Passive Cell Voltage Balancer 28
14.8 Sleep And Wake-Up Function 28
14.9 Reset Button 29
14.10 Remote Monitoring and Management 29
14.11 Light Bar Control 29
15. BATTERY CARE 30
15.1 Battery storage and disposal 30
15.2 Cell Balancing 30
15.3 Charging And Discharging 30
15.4 Connecting Third-Party devices 30
15.5 Handling 30
15.6 Installation Environment 30
15.7 Maintenance and Repairs 30
16. COMPLETION 31
16.1 Hubble Energy Apps 31

1. IMPORTANT INFORMATION

If the battery voltages vary by more than 2 V, the batteries cannot be paralleled without first charging them individually to the same voltage.

Due to the low impedance of the batteries, connecting them in parallel with different voltages will cause very high magnitude currents to flow between them as they try to equalize.

This will cause the batteries to shut down due to over current protection.

1.1.1 Manual Explanation

It is important that you read this manual before attempting the installation of your battery. Please take note of certain steps to ensure correct inverter compatibility.

Please visit https://www.hubbleenergy.com/ for the latest version of this manual.

1.1.2 Warning

Working with high-voltage systems is dangerous. Do not attempt to modify your inverter and battery setup unless you are certain you understand the risk. Speak to a qualified electrician if you are unsure.

1.1.3 Safety

Please ensure you follow all the safety regulations, standards and codes that apply to the installation and wiring of alternative energy backup systems, whether it is an off grid or grid-connected installation.

The battery should only be installed by a suitably qualified and trained person or under the direct guidance and supervision of such a person, who will be responsible for their safety.

1.1.4 Warning

HEAVY EQUIPMENT

Due to the battery's heavy weight, wear safety shoes when installing and handling the battery. More than one person will be required to unpack the battery safely.

1.1.5 High Currents

There is a risk of electric burns due to the high current if a battery is short circuited. Please use properly insulated tools when connecting the battery.

1.1.6 Inverter Setup

Ensure that the inverter settings are correctly configured for the battery.

1.1.7 3rd Party Interfacing Devices Not Allowed

It is strictly forbidden to access or interfere directly with the battery through third party devices such as monitoring devices or logging devices that are not Hubble Energy products. Third party monitoring and interfacing devices have the potential to change charge voltages and algorithms inadvertently - this can cause a catastrophic fire hazard. Therefore, interfacing to the BMS directly without authorization will void the warranty and Hubble Lithium will not be liable for any resulting damages.

---

2. INTRODUCTION

The Hubble AM-5+ is a maintenance-free Lithium Iron Phosphate ($LiFePO_4$) battery designed for residential and commercial backup power systems. It operates at 51.2 V, offers 100Ah capacity, and provides 5.12 kWh of usable energy. A built-in Battery Management System (BMS) protects the cells by managing safety and automatically disconnecting the battery when necessary.

The unit includes an integrated Wi-Fi-enabled Cloudlink system, which allows remote monitoring and management via the Hubble Cloudlink mobile app or web portal. The battery continues to function normally even without a Wi-Fi connection.

The battery enclosure was designed to provide a sleek wall mounted storage solution, with an enclosed internal wiring compartment to prevent accidental access to power and communication cables, thus ensuring a safer and more reliable installation. A LED light bar on the enclosure allows quick observation of battery parameters such as the state of charge and power flow direction

Battery capacity can be expanded by connecting to 15 batteries in parallel, mainly for extended energy storage. However, when higher power output (higher amperage) is required, fewer parallel units are recommended to avoid practical issues associated with large current-carrying cables.

⚠️ Important safety note: AM-5+ batteries must never be connected in series, only parallel connection only is allowed

Hubble Energy has been certified with leading inverter manufacturers for compatibility with their products. Please view our website here https://www.hubbleenergy.com for the full compatibility list.

3. TYPICAL APPLICATION

The Hubble AM-5+ battery plays a key role in maintaining a reliable, efficient, and stable energy storage system. Its main functions include:

Energy Storage: Captures excess energy from sources like solar PV or during low-demand periods, making it available when production drops or demand increases.

Backup Power: Automatically supplies power during grid failures or instability, ensuring essential devices and systems remain operational.

Load Shifting & Peak Shaving: Helps reduce energy costs by charging during off-peak times and discharging during high-demand periods to minimize expensive grid usage.

Renewable Energy Integration: Smooths fluctuations in renewable generation, providing a steady power output and improving overall system performance and sustainability.

System Monitoring & Control: Includes Cloudlink for remote monitoring, diagnostics, and performance management via the Hubble Cloudlink mobile app or web portal

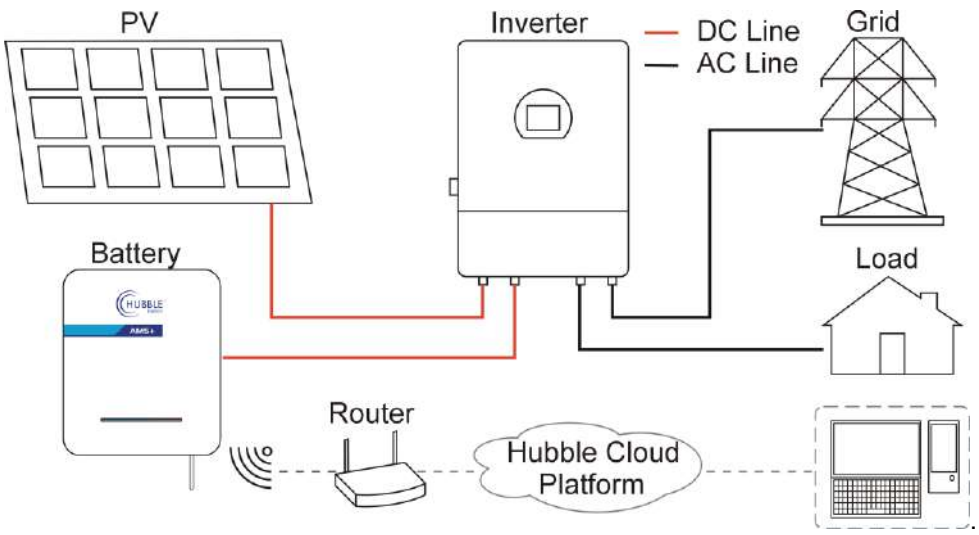

4. TECHNICAL SPECIFICATIONS

Battery Parameter	Specification
Model	Hubble AM-5+
Nominal Energy	5.12 kWh
Design Capacity	100 Ah
Nominal Voltage	51.2 Vdc
Battery Type	LiFePO4 (LFP) 16 Cells per battery.
Operating Voltage Range	49 Vdc – 58.4 Vdc
Charging Voltage	55.2 Vdc
Inverter Cut Off Voltage	49 V (recommended) / 47 V (minimum)
Charge Current (A)**	100 A max
Discharge Current (A)	100 A max
Cell Service Life	Unlimited cycles within the Hubble Energy 10-year warranty (Ts & Cs Apply)

Battery Management System (BMS)

Power (Self-Consumption)	≤ 2 W
Cell Balancing (Charging Mode)	Passive - activated once cells are close to full charge voltage
Intelligent Current Limiter	Limits charging current to 20 A if it exceeds 100 A
Protection	Over Charge; Over Discharge; Over Current; Short Circuit; Over and Under Temperature

Cloudlink (Monitoring)

Cloudlink	Built-In
Power (Self-Consumption)	≤ 2 W
Wi-Fi Protocol	802.11 b/g/n/e/i (802.11n up to 150 Mbps)
Communication	CAN / RS485 / RS232

Physical

Dimensions	600 * 500 * 153mm (Height, Width, Depth)
Weight	Approx. 53 kg
Installation Mounting	Wall Mounted – Mounting Bracket

Environmental

Operating Temperature	-10 °C to 50 °C
Storage Temperature	10 °C to 50 °C
Humidity	15% to 75%
Certification	CE, UN38.3

5. PRODUCT OVERVIEW

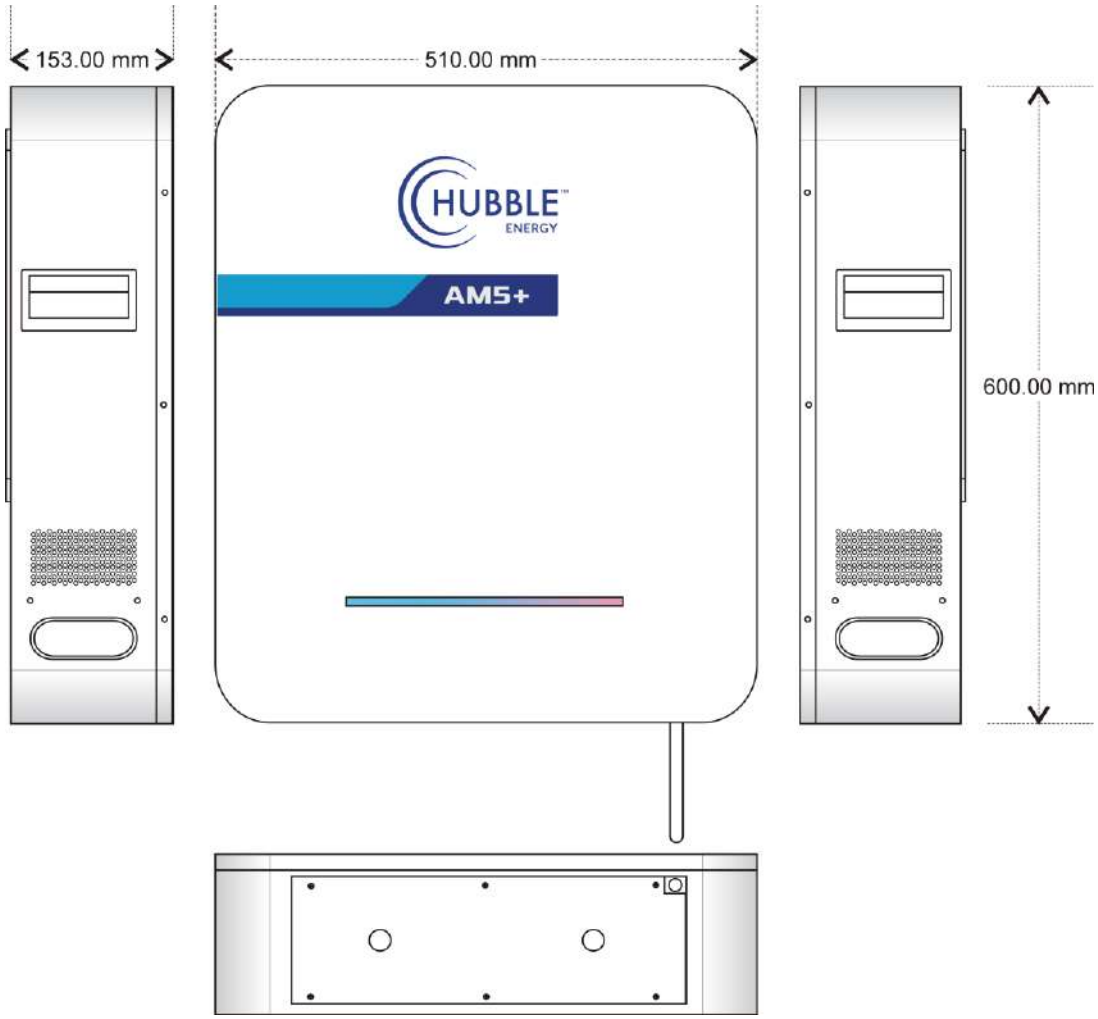

5.1 Packaging Content

TRANSPORT & PACKAGING

No liability can be accepted for damage in transit if the equipment is not transported in its original packaging. Only store the product in a dry environment, within the recommended storage temperature range.

The following is contained in the packaging.

- 1x AM-5+ battery.
- 1x Wall mounting bracket.
- 4x M8X60 anchor bolts.
- 1x 1,5m RJ45 battery link cable (for paralleling batteries).
- 1x 1m Red 25mm² battery cable.
- 1x 1m Black 25mm² battery cable.

5.2 Wiring Interface

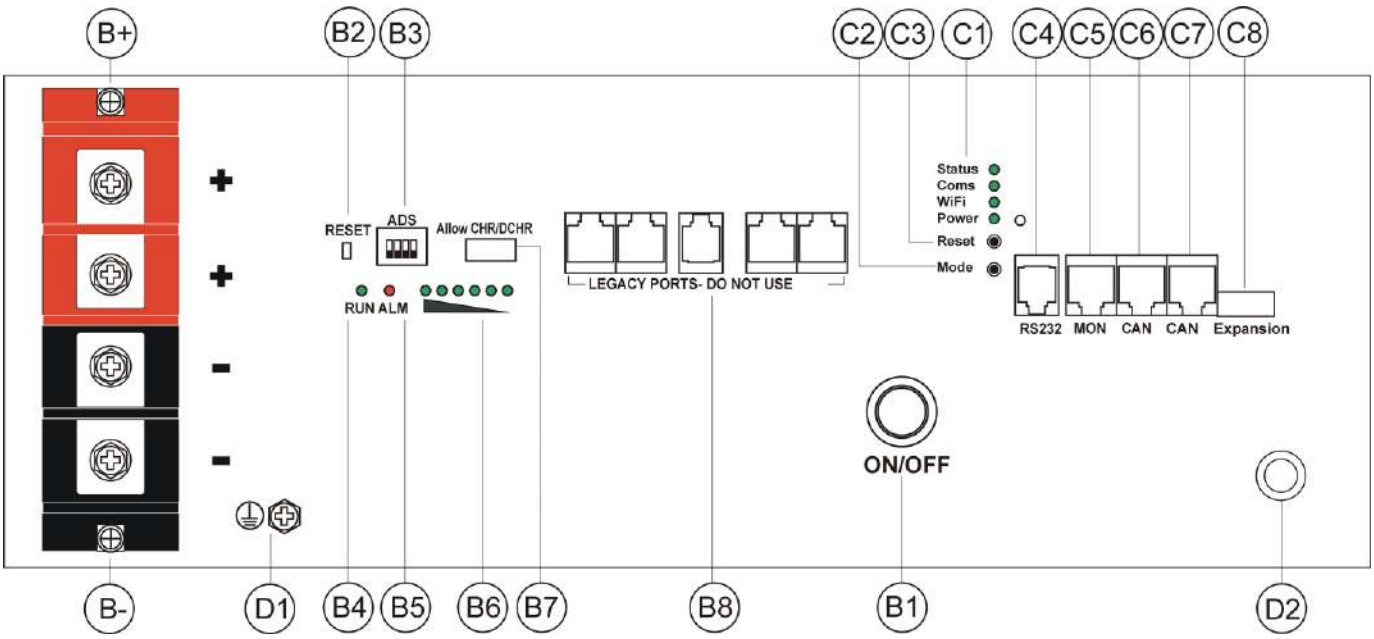

5.2.1 Legends

Legend	Description
B+	Battery POS terminals
B-	Battery NEG terminal
B1	ON/OFF switch
B2	Reset Button
B3	Dip Switches
B4	Run LED
B5	Alarm LED
B6	SOC Indicator
B7	Allow Charge/Discharge Dry Contacts
B8	Legacy Ports – “Do Not Use”

Legend	Description
C1	Cloudlink LED’s
C2	Cloudlink Mode Button
C3	Cloudlink Reset Button
C4	RS232 Port
C5	MON Port
C6	CAN Port
C7	CAN Port
C8	Expansion Connector “Not in Use”
D1	Earth Connection
D2	Antenna

5.3 Wiring Interface Description

A brief description of the function of each interface is provided below.

Note that the BMS indicators, DIP switch settings and Cloudlink indicators will be discussed in more detail in later sections of the manual.

5.3.1 Battery Terminals

ID	Interface	Function
B+	Battery POS terminal	Allows the positive output of the battery to be connected to the system.
B-	Battery NEG terminal	Allows the negative output of the battery to be connected to the system.

5.3.2 BMS Interface

B1	ON/OFF switch	Powers the BMS ON/OFF. The BMS connects the battery cells to the battery terminals though an electronic switch unless a protection condition is detected.
B2	Reset	The reset button is located to the left of the dip switches and the button can be used to wake up the battery from the low power sleep state, put it in the sleep state, or to reset the BMS protection board. **Wake up:** Press and hold the reset button for more than 1 second. **Enter sleep mode:** Press and hold for 3 to 6 seconds. **Reset protection board:** Press and hold for more than 6 seconds.
B3	Dip Switches	The DIP switches are used to set a unique communication address for each battery.
B4	Run indicator	If the run LED is lit or flashing, the battery terminals are connected to the battery cells. • A flashing run indicator signals that the battery is discharging. • A lit indicator signals that the battery is charging.
B5	Alarm Indicator	A red alarm indicator is flashing or lit if respectively an alarm on protection condition is detected. In case of an alarm the battery will continue to operate as indicated by the run indicator. In case of a protection condition the run, indicator will turn off and the battery terminals will be disconnected from the cells to either disconnect the charging, discharging or both current paths.
B6	Battery SOC indicator	Six green indicators light up linearly to indicate the current state of charge of the battery Each indicator represents a 16.7 % change in SOC. While the battery is charging, the leftmost active SoC indicator will be flashing to indicate the battery is being charged. (Do not confuse this with the run indicator which flashes when the battery is being discharged.)
B7	Allow Charge/Discharge 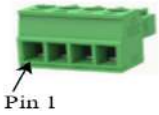	The dry contacts are potential free normally open contacts, that can be used to signal when the BMS experiences an alarm or protection condition. Two dry contacts are available on the four-pin connector: • Pins 1 and 2 will close when there is a low battery alarm. • Pins 3 and 4 will close when there is a protection or fault condition.
B8	Legacy Ports	Do Not Use

5.3.3 Cloudlink Interface

C1	LED Indicators	Description
	Status	Four green LED's provide information on the status and operating mode of the Cloudlink. **Status Led** After the Cloudlink reboots the status Led flashes rapidly for about 5 times. Thereafter it flashes once every 15 seconds to indicate that the Cloudlink is operational.
	Coms	**Coms Led** Indicates if a communication connection exists to the battery, inverter and/or other 3rd party equipment such as energy meters. **OFF:** No serial or CAN communication to devices present (e.g., no battery or inverter connected). • **FLASHING**: The Cloudlink has serial or CAN communications with one device. • **LIT:** if the Cloudlink has serial or CAN communications to more than one device.
	WiFi	**Wi-Fi Led** Status of Wi-Fi connection • **OFF:** No Wi-Fi networks could be found. • **FLASHING:** Connected to a Wi-Fi network. • **LIT:** Connected to a Wi-Fi network with internet access.
	Power	**Power Led** • **LIT:** The Cloudlink is powered.

5.3.4 Cloudlink Buttons

C2	Mode	Mode Button - Sets the Cloudlink into different configuration modes.
C3	Reset	Reset Button - Reboots the Cloudlink.

5.3.5 Cloudlink Communication Ports

C4	RS 232 Port	This RJ12 port is unused
C5	MON Port 	This RJ45 MON port contain three communication interfaces. • RS232 (Pin 1 & 2) • RS485 (Pin 3 & 5) • CAN (Pin 6 & 7) Pin: 1, 2, 3, 4, 5, 6, 7, 8 Function: RS232-X, RS232-TX, RS485-B, , RS485-A, CAN-H, CAN-L, GND
C6 & C7	CAN Port 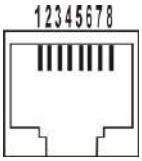	• RS485 BMS Battery Link (Pin 1 & 2) Each slave battery communicates over the RS485 BMS link to transmit its battery information to the master battery. • CAN (Pin 4 & 5) The master battery sends the combined battery information to the inverter • RS485 (Pin 7 & 8) Pin: 1, 2, 3, 4, 5, 6, 7, 8 Function: RS485 BMS Link-B, RS485 BMS Link-A, , CAN-H, CAN-L, GND, RS485-A, RS485-B
C8	Expansion Port	The expansion port is reserved for future use.

6. AM-5+ DIP SWITCH SETTINGS

For parallel connected batteries, each battery must be assigned a role as either a MASTER or a SLAVE, and all batteries must be interconnected using the battery link cables via the CAN ports.

In a parallel battery system, only one battery can function as the MASTER, and up to 14 additional batteries may be configured as SLAVES, each with a unique address.

Sometimes, if communication settings are changed while the inverter/battery is powered on and operating, the BMS data may not refresh correctly. For this reason, any adjustments to the communication cabling or battery DIP-switch settings should be made only when the entire system is powered down and fully isolated.

It may also be necessary to perform a Cloudlink reset after making these configuration changes to ensure proper communication and data updates

If the system uses only a single battery, it must be configured as the MASTER

To accomplish this, the DIP switches

must be set for each battery.

BATTERY NUMBER	ASSIGNMENT	ADDRESS	DIP SWITCH POSITION	DIP SWITCH: ADDRESS			
				#1	#2	#3	#4
1	Master	1		ON	OFF	OFF	OFF
2	Slave 1	2		OFF	ON	OFF	OFF
3	Slave 2	3		ON	ON	OFF	OFF
4	Slave 3	4		OFF	OFF	ON	OFF
5	Slave 4	5		ON	OFF	ON	OFF
6	Slave 5	6		OFF	ON	ON	OFF
7	Slave 6	7		ON	ON	ON	OFF
8	Slave 7	8		OFF	OFF	OFF	ON
9	Slave 8	9		ON	OFF	OFF	ON
10	Slave 9	10		OFF	ON	OFF	ON
11	Slave 10	11		ON	ON	OFF	ON
12	Slave 11	12		OFF	OFF	ON	ON
13	Slave 12	13		ON	OFF	ON	ON
14	Slave 13	14		OFF	ON	ON	ON
15	Slave 14	15		ON	ON	ON	ON

7. PARALLELING BATTERIES GENERAL INFORMATION

Multiple batteries can be connected in parallel when a longer backup time is required (higher energy storage capacity) or when more power (higher amperage) is required or a combination of both.

If the main purpose is to increase the output power, it is recommended not to connect more than two to eight paralleled batteries to a single inverter due to the high amperage large diameter cables that will be required, which will make the installation impractical.

If the main purpose is to increase the backup time with a low-power inverter and load matching the power delivery of one or two batteries, more batteries may be connected in parallel.

7.1 Parallel Battery Requirements

Batteries can be connected in parallel, provided that the following requirements are met:

- Only identical battery models of the same capacity may be connected in parallel.
- The voltage of each battery must be identical, otherwise large currents will flow between the batteries when they are turned on. This can cause the battery's protection to disable the battery.
- The power cabling must be done in such a way that the impedance from the inverter to each battery is identical, to ensure current sharing.
- DIP switches must be configured on the battery to set a unique address for each battery.
- Communication cables must be connected between the batteries and from the master battery to the inverter. Connection or splitter boxes are not permitted to be used.

7.2 Power Cables

Due to the low impedance of the batteries, it is very important that the power cable lengths from each battery to the inverter are identical, otherwise, the battery connected with the shortest cable will provide most of the current.

7.2.1 Paralleling Of Batteries Using Cables

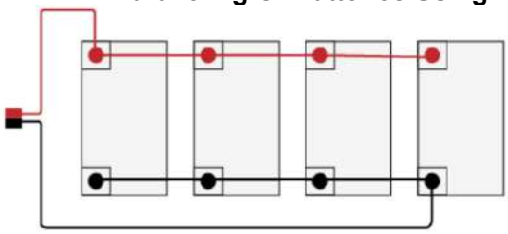

- All positive poles are connected to together.
- All negative poles are connected together.
- Due to paralleling the cables must be rated at a multiple of the rated battery current.
- If the aim of paralleling is to increase output power, this becomes impractical when many batteries must be connected in parallel, due to the large cable diameters involved.
- These cables will also be too big to connect to the terminals on the batteries.
- To ensure that the impedance to each battery is the same, connect the positive load cable to the positive terminal of the first battery, and connect the negative load cable to the negative terminal on the last battery.
- These cables must be rated at a multiple of the rated battery current.

7.2.2 Paralleling Of Batteries Using Busbars

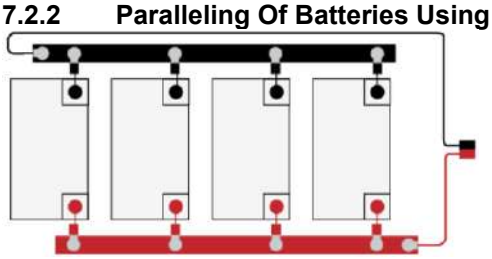

- All positive poles are connected together using short cables to a central copper busbar.
- All negative poles are connected together using short cables to a central copper busbar.
- The cables between the batteries and busbars are rated for the rated battery current.
- To ensure that the impedance to each battery is the same, connect the positive load cable to one end of the positive busbar closest to the first battery, and connect the negative load cable to the opposite end of the negative busbar closest to the last battery.
- These cables must be rated at a multiple of the rated battery current.

8. INSTALLATION

WARNING - HEAVY PART

The HUBBLE AM-5+ weighs 53kg and requires at least TWO people to lift it safely.
The handles on the sides are not suitable for lifting the battery and are used for positioning.

This section provides on how to install the battery, how to parallel batteries and describe the communication cable pinouts.
The battery should be installed using the guidelines contained in this manual and should only be used for its designated application.

- Never install the Hubble AM-5+ where there is corrosive or explosive gas.
- Do not install the battery outdoors or in direct sunlight or damp environments.
- Only qualified personnel should perform electrical connections.

8.1.1 Unpack the battery and check the condition

- Carefully remove packaging without using sharp objects near the enclosure.
- Check the battery for any damage.
- If the battery is damaged, do not proceed and contact your supplier.
- When no damages are visible, please proceed.

8.1.2 Positioning

- Ensure the mounting surface is flat, level, and strong enough to support the unit's weight.
- Ventilation openings are unobstructed
- There is clear access to the bottom wiring cover.
- Power and communication ports are reachable.

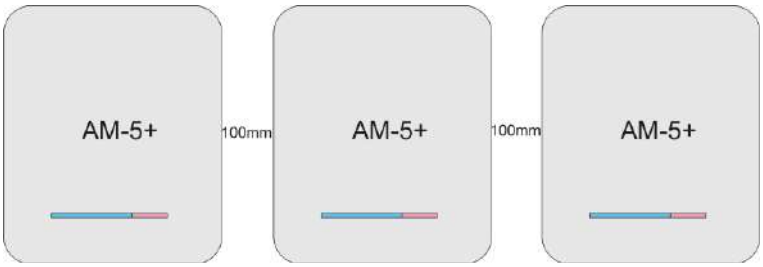

Do not connect any DC cables to the battery, if the Cloudlink hasn't been configured yet.

The wiring compartment is enclosed by a removable lid, secured with magnetic strips for easy access. Once the lid is removed, the terminals, controls, indicators, and communication ports become accessible, allowing the installer to connect power and communication cables and to turn on and configure the battery.

8.1.3 First Power Up Check

- Turn the battery "ON" by means of the ON/OFF switch, ON/OFF (without anything connected to the battery terminals) and verify that the battery, CloudLink and light bar turns on.

  Place the Cloudlink into configuration mode as described below. "CONFIGURATION MODE".

- Ensure that the Cloudlink firmware version is V5.0.6 or latest version, if in doubt, please contact Hubble Technical Support
- If firmware version is on V5.0.6, you may proceed with the install.

- If the firmware version is not on V5.0.6, or a later version, please relay battery serial number and Cloudlink serial number to the Hubble Technical Support team, to queue the firmware upgrade.
- On confirmation of the V5.0.6 firmware upgrade to V5.06 or later, you may proceed with the install

8.1.4 Configuration Mode

Step 1: Place the Master battery Cloudlink into configuration mode by pressing the Mode button marked “M” on the battery wiring panel until one beep, followed by 2 consecutive beeps:

- Then, release the Mode button.
- The Cloudlink is now in Configuration Mode.
- This can be observed by viewing the flashing LED bar on the front LID – “The green LED bar sweeps from left to right. When only the last few LEDs on the right begin flashing, it indicates that the configuration mode is timing out.
- Proceed to section 8.1.5

8.1.5 Connecting to the RIOT CloudLink

Step 2: Open the WiFi menu on your mobile device (also possible on a desktop).

Connecting to the RIOT CL	
• Scan for available networks. • Locate the Cloudlink WiFi access point (RIOT CL-xxxx *see example below. • Tap on the “RIOT CL-#” Wi-Fi connection and connect to the Cloudlink device. • If you do not see the RIOT/Cloudlink WiFi connection, refresh your WiFi list. • If after ten seconds you do not see the RIOT/Cloudlink WiFi connection, please confirm that the LED bar is still flashing in sequence as described in the Step 1. • If they are no longer flashing then return to the beginning of Step 1, and repeat the process	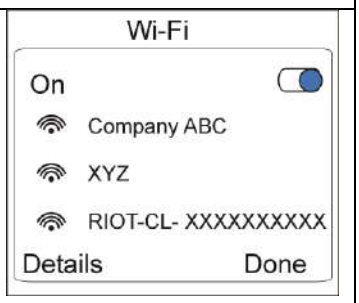
• Connect to the RIOT-CL • If your mobile device prompts you to disconnect from the “RIOT CL-#” network, please select “connect anyway” or “keep connection” to proceed. • The AP displays part of the unique serial number for your device. • Use this number to identify the device if you have multiple devices. • No password is required to connect as the “RIOT_CL#” is an open network • Once connected the connection status changes to “Connected without internet/not secured”.	
• Open your browser on your mobile device or computer, we recommend using Google Chrome. • Enter the following below address in the URL box at the very top of the page: http://192.168.4.1 and the following information page is displayed	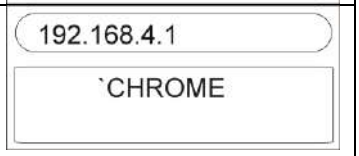

Step 3: Wait until the Information page is displayed and confirm the software version.

Information Page	
Software Version must be equal or greater than V5.0.6	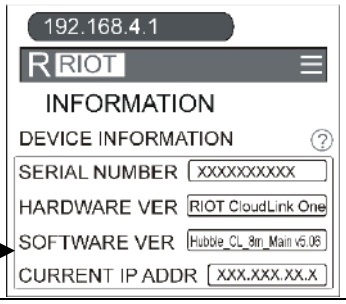

Turn the battery OFF by means of the ON/OFF switch. ON/OFF

Repeat the above procedure for all the remaining batteries if any.

8.2 Mounting the Bracket

Mounting Bracket dimensions

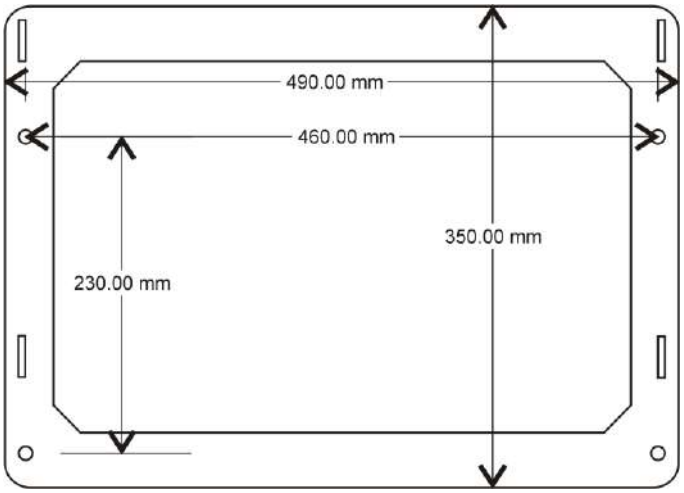

To mount the battery onto the wall, mount the mounting bracket using 4 x M8x60 anchor bolts, then carefully lower the battery over the mounting bracket's hooks.

1. As shown in the figure below,

Press the mounting bracket against the wall surface, level the bracket with a spirit level. Mark the 4 x positioning holes against the mounting surface.	Remove the mounting bracket and drill the marked holes into the wall.	Insert the 4 x anchor bolts into the drilled holes. Secure the mounting bracket and tighten the nuts.
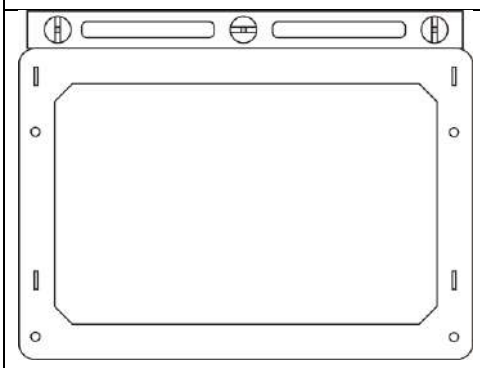	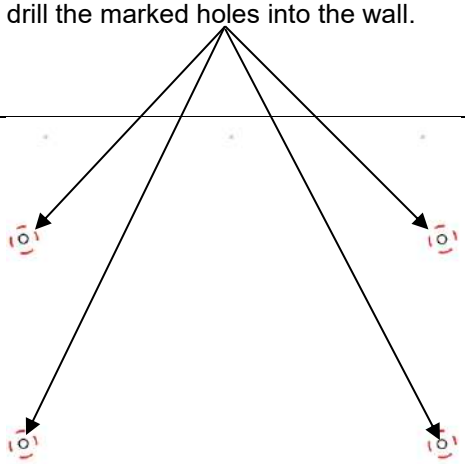	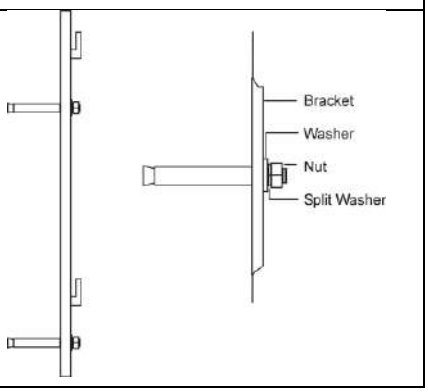

2. Lift the AM-5+ battery and hook it into position securely onto the wall mount bracket

8.3 Single Battery Installation

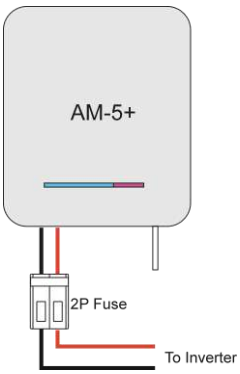

8.4 Parallel Connected Batteries

If the system requires parallel connected batteries, measure and note the voltage of each battery, to check if the batteries are unbalanced.

If the voltages vary by more than 1V, the batteries cannot be paralleled without first charging them individually to the same voltage. (Due to the low impedance of the batteries, connecting them in parallel with different voltages will cause very high magnitude currents to flow between them as they try to equalize.

This will cause the batteries to shut down due to over current protection.)

8.4.1 Batteries connected in parallel using a busbar system.

If more than two batteries are paralleled, the preferred method to parallel them is to use a busbar system, to ensure the batteries share current equally.

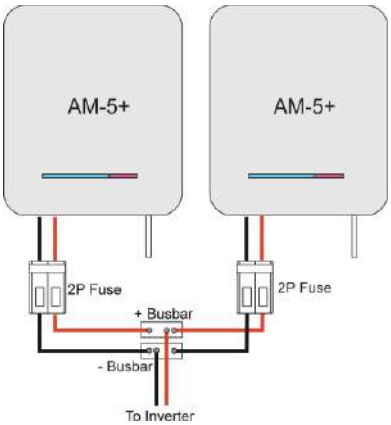

8.4.2 Mount the DC Isolating Device

Mount the DC isolation device/s. Either use a properly rated DC circuit breaker or fuse disconnect switch, to allow the battery / batteries to be connected to a single or multiple inverters.

- The isolation device must provide overload protection and isolate both the positive and negative battery poles.

8.4.3 Mount/Install the Rest of the Power System Components

Mount the rest of the power system components e.g., inverter, distribution boards etc.

8.4.4 Connect the Battery Cables

DC Battery wiring must comply with local installation standards.

- Ensure that the battery ON/OFF switch is turned off.
- Identify the labelled terminals/ports:
  Battery positive (+).
  Battery negative (–).
- Route cables through the provided cable entry glands.
- Ensure the battery terminals are connected securely and with correct DC polarity.

Single battery installation:

- Connect the battery terminals to the DC isolation device using correctly rated cables.

Parallel battery installation:

- If a busbar system is used, connect the battery terminals to the busbar system and then to the DC isolation device, using correctly rated cables.

- If no busbar system is used, connect the batteries in parallel using the main battery terminals.
- Please note that the current flowing between the batteries will now be a multiple of the rated current of a single battery.
- Ensure that correctly rated cables are used.

8.4.5 Configure the Battery DIP Switches

Configure the DIP switches to set the address for each battery used. In a single battery installation ensure the DIP switch is set to the master battery. In a parallel connected installation, each battery must have a unique address.

Refer to the **Section 6** "**DIP Switch Settings**" for more details on configuring the DIP switches.

8.5 Communication Cable Connection

8.5.1 Inverter BMS CAN to Battery CAN/Inverter BMS 485 to Battery 485 cable.

DO NOT USE A FULLY POPULATED COMMS CABLE BETWEEN THE INVERTER AND THE BATTERY

Depending on the type and model of inverter used, the pins onto which the CAN and RS485 bus signals terminate on the inverter side will differ.

The battery contains CAN and RS485 signals on both the battery CAN ports. Choose the most appropriate port to simplify your cable requirements when making connections.

The CAN-H and CAN-L wires carry all the real-time data from the battery to the inverter. Without these two lines connected correctly, the inverter cannot read the battery's status, including: State of Charge (SOC), Voltage, Current limits, Temperature, Charge/discharge permissions.

Battery CAN Port

Pin	1	2	3	4	5	6	7	8
Function	Do not use this pin when connecting to the inverter	Do not use this pin when connecting to the inverter	Do not use this pin when connecting to the inverter	CAN-H	CAN-L	GND	RS485-A	RS485-B

Before wiring:
Before connecting the communications cable between Inverter and the battery one must establish the following because Incorrect pin alignment may prevent communication or damage equipment.

- Check if the inverter has one combined port or two separate ports.
- Always confirm the inverter's RJ45 pin layout in the inverter's installation manual before connecting the cable.
- Inverter manufacturers do not all follow the same pin numbering; therefore, the installer must verify CAN pin and RS485 positions every time.

Inverters With a Single Combined Communication Port:

- Some models use ONE RJ45 port that carries both CAN and RS485 signals.
  Labelled BMS 485/CAN, CAN/485 etc, please check your inverter manual for the correct pin layout.

Inverters With Two Separate Communication Ports:

- Some inverters provide one port for CAN and another for RS485.

8.5.2 Battery Parallel Link Cable:

In a parallel battery installation, link the batteries together using the supplied battery link cable in a daisy chain configuration, using the two ports labelled as CAN.

- Connect the battery link cable supplied from the last CAN port of the master battery to the first CAN port of the first slave battery.

Battery Link Cable Mapping:

Pin 1 → Pin 1 Pin 2 → Pin 2 Pin 3 → Pin 3 Pin 4 → Pin 4
Pin 5 → Pin 5 Pin 6 → Pin 6 Pin 7 → Pin 7 Pin 8 → Pin 8

- Then connect the next battery link cable from the second CAN port of the first slave to the first CAN port of the next slave battery.
- Repeat this pattern for all remaining slave batteries.

8.5.3 Can Terminator:

A CAN terminator is supplied with every battery:

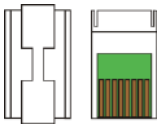

- If only a single battery is used, the CAN terminator must be inserted into the second CAN port of that battery.
- When multiple batteries are used, the CAN terminator must be inserted only into the last CAN port of the final slave battery.

Please Note:
Refer to the reference diagrams on the next page for CAN enabled Inverters connected to Hubble batteries.

8.5.4 Single AM-5+ Battery Communications Wiring

8.5.5 1 x AM-5+ Battery

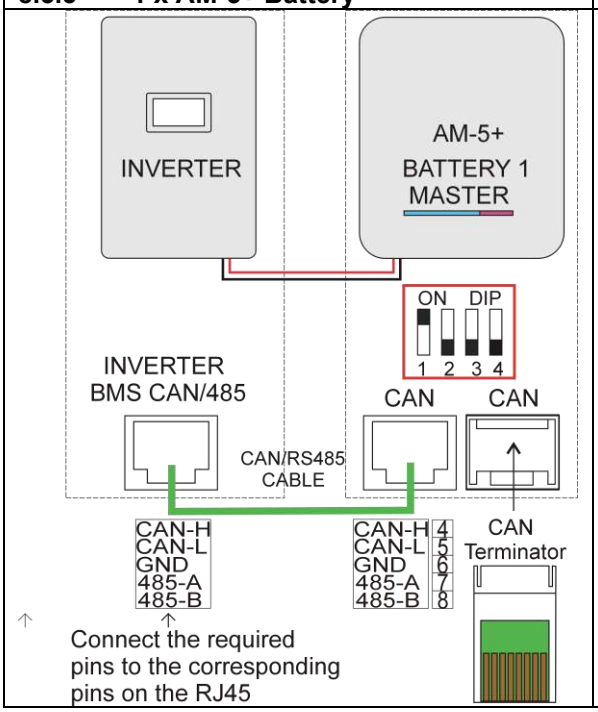

8.5.6 2 x AM-5+ Batteries

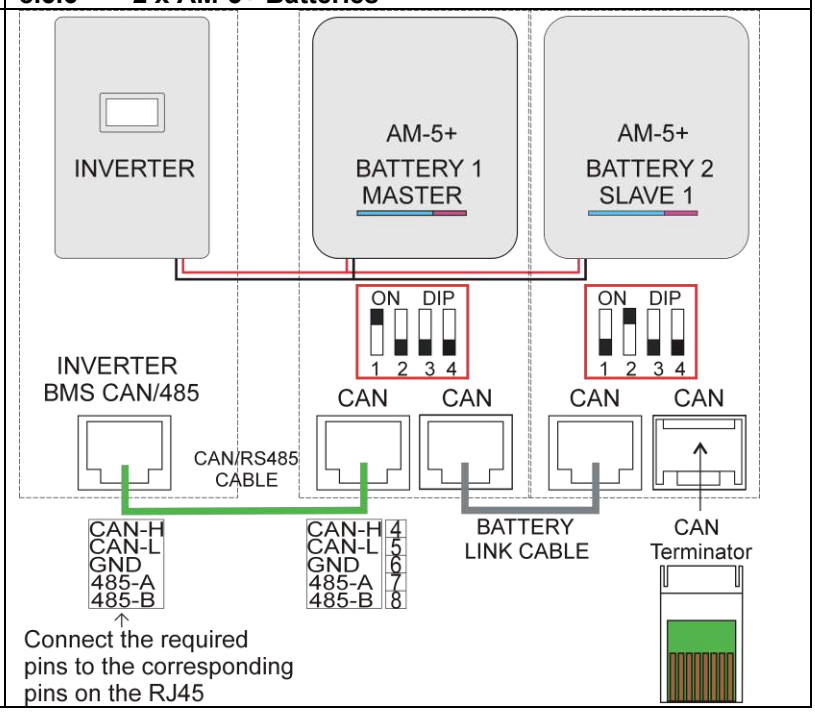

If the inverter has a CAN port, its CAN-H and CAN-L must be connected to the battery's CAN-H and CAN-L.

Please Note: Communications cabling color in this diagram is for illustration purposes only

---

8.5.7 15 X AM-5+ Batteries

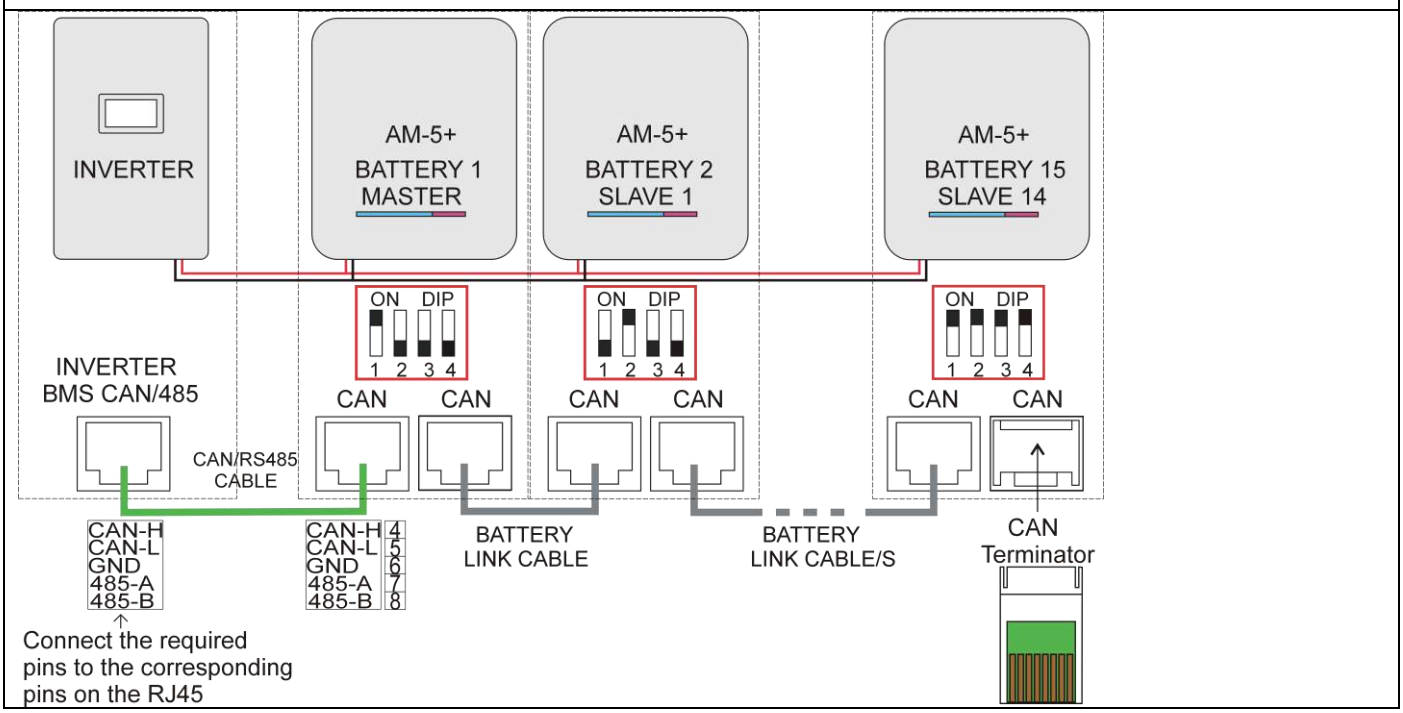

If the inverter has a CAN port, its CAN-H and CAN-L must be connected to the battery's CAN-H and CAN-L.

Please Note: Communications cabling color in this diagram is for illustration purposes only

8.6 Connecting The New AM-5+ Battery with Existing Installation Of AM-5 Batteries

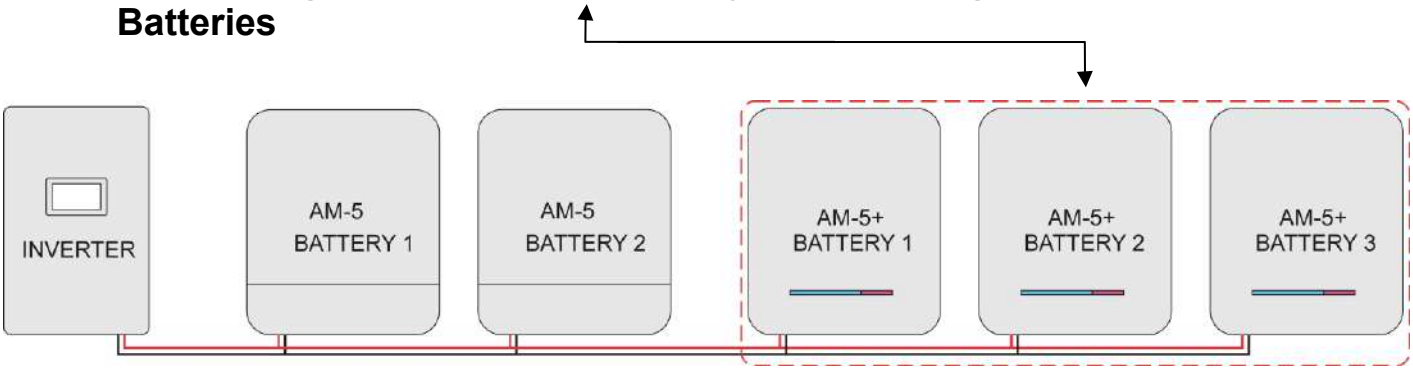

If AM-5 batteries and AM-5+ batteries are run in parallel at a site as above and:

- CAN communication between the master BMS and the inverter system is required, and/or
- Battery monitoring is desired
  "Then it will be necessary to install a standard CloudLink on the master battery of the AM-5 bank"

Furthermore, the CloudLinks must be setup, and wired, as follows:

- The Internal CloudLink on the new master AM-5+ will be setup as a CloudLink "MASTER" and communicate with the inverter.
- This Internal CloudLink will collect information for the entire site.

The CloudLink on the older master AM-5 will be setup as a CloudLink "SLAVE".

- This CloudLink will collect information for all the AM-5 batteries, and pass this on to the master CloudLink,
- These CloudLinks must be connected to each other via their CAN ports.

If the user wants the battery bank's charge and discharge to be controlled via CAN messages, then the AM-5+ master's CloudLink must be configured and wired to send BMS CAN messages to the master inverter or Cerbo.

The rest of this section sets out the BMS and CloudLink firmware requirements needed for running AM-5+'s in parallel with AM-5's, and explains the CloudLink setup in more detail.

Requirements:
For the communication between the CloudLinks to work, both the CloudLink settings and the BMS's DIP-switch positions must be setup correctly.

CloudLink Firmware:

- All the AM-5+'s internal CloudLinks must be running CloudLink Firmware v5.0.6 or later.
- The master AM-5's External CloudLink must also be running CloudLink Firmware v5.0.6 or later.

Example diagrams Sections:

- 8.6.1 - 1 x AM-5 connected to 1 x AM-5+
- 8.6.2 - 1 x AM-5 connected to 2 x AM-5+
- 8.6.3 - 2 x AM-5 connected to 2 x AM-5+

8.6.1 1 x AM-5 connected to 1 x AM-5+

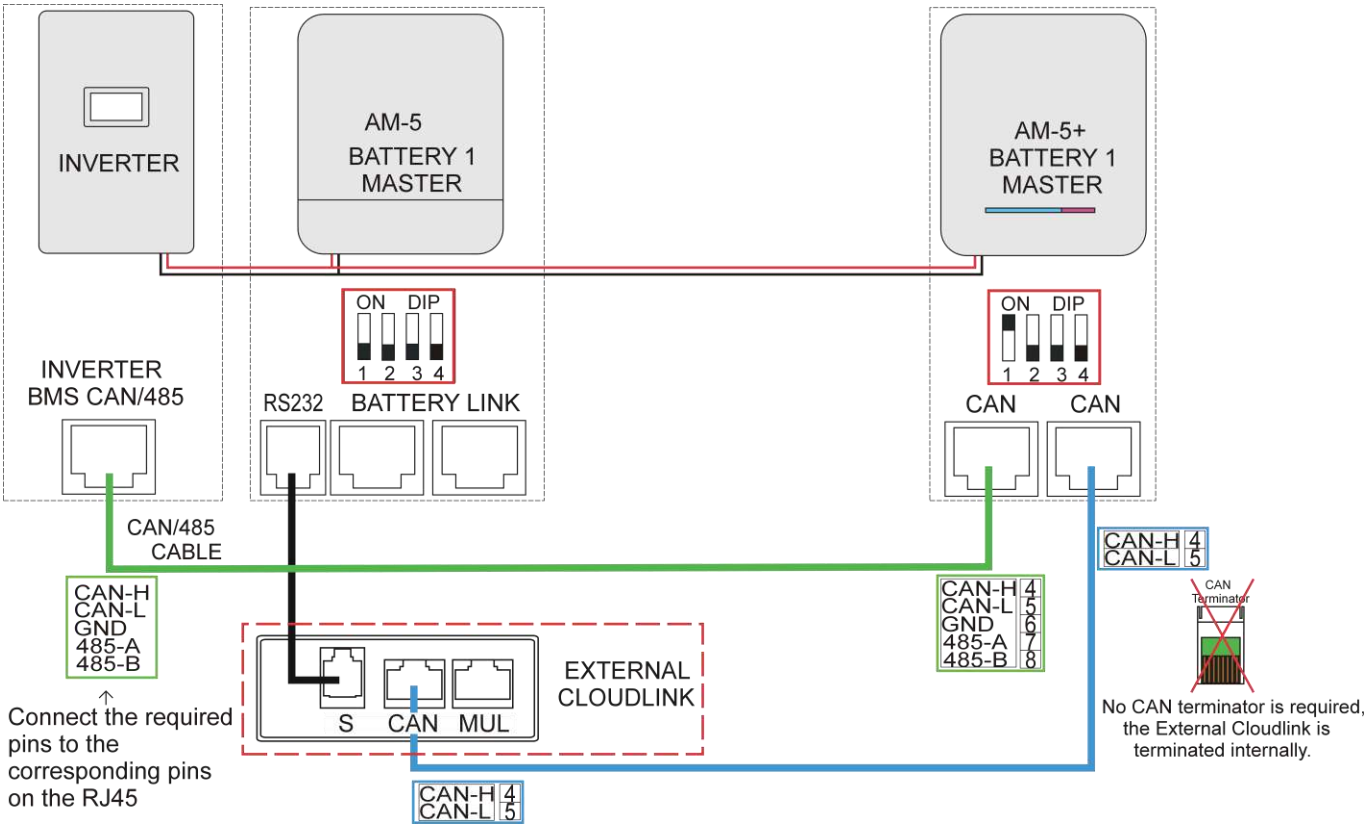

Please Note: Communications cabling color in this diagram is for illustration purposes only.

8.6.2 2 x AM-5 connected to 1 x AM-5+

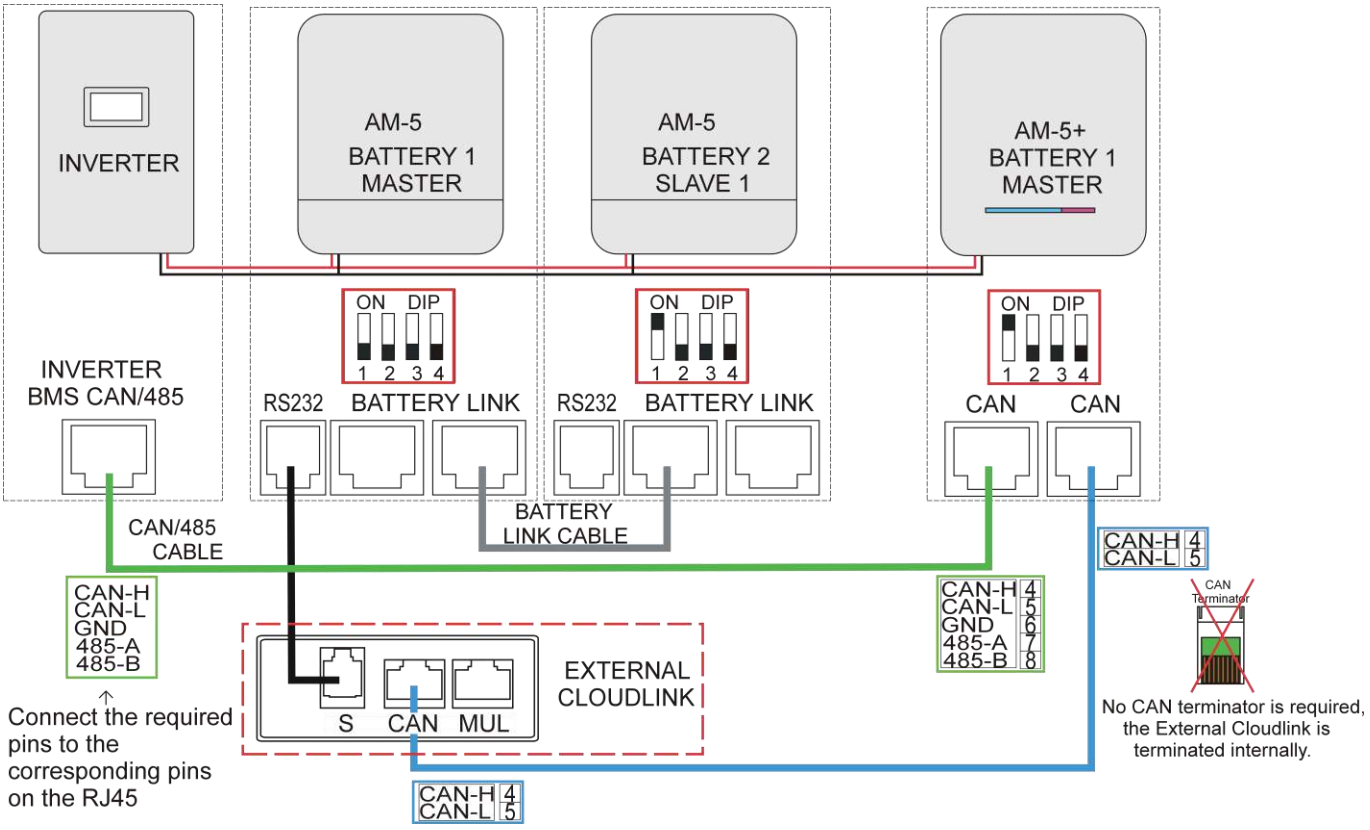

Please Note: Communications cabling color in this diagram is for illustration purposes only.

8.6.3 2 x AM-5 connected to 2 x AM-5+

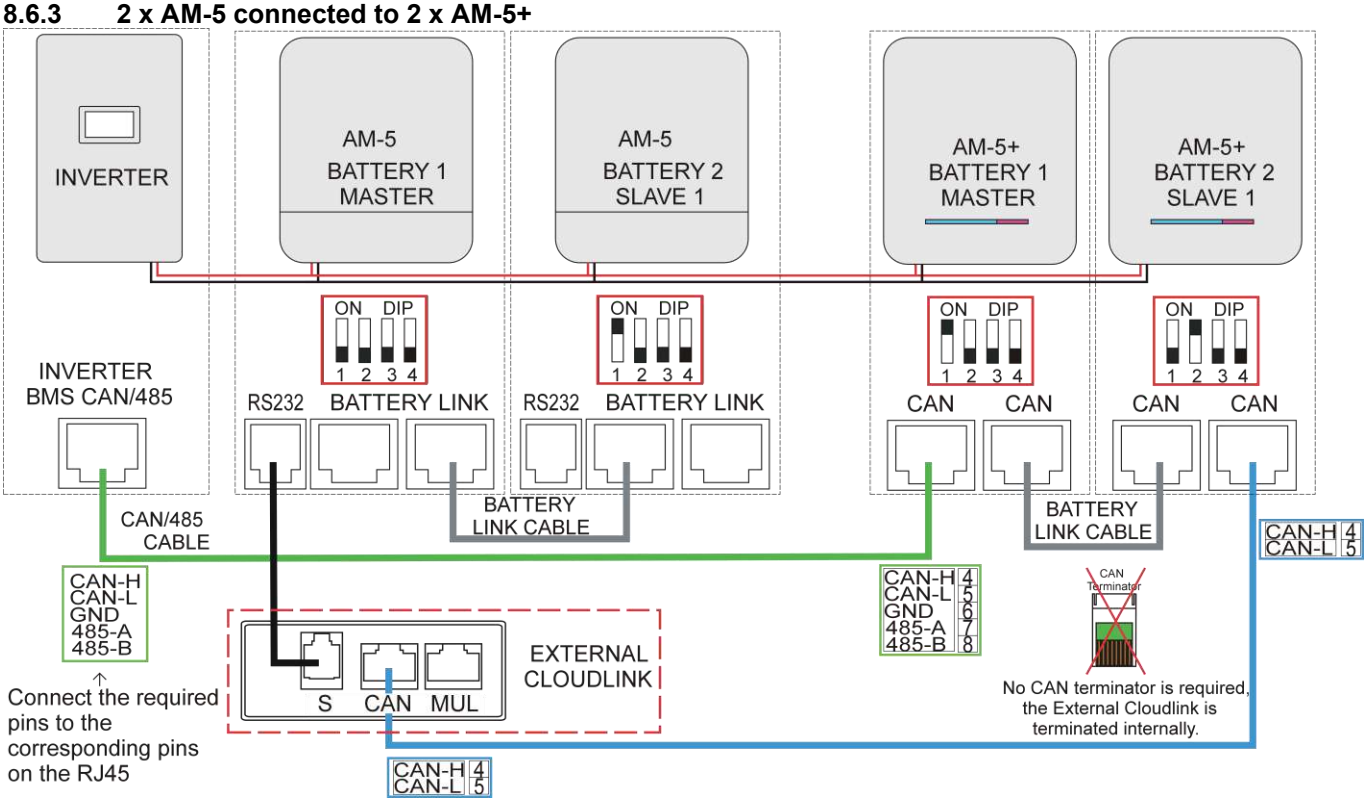

Please Note: Communications cabling color in this diagram is for illustration purposes only.

External and Internal CloudLink setup example

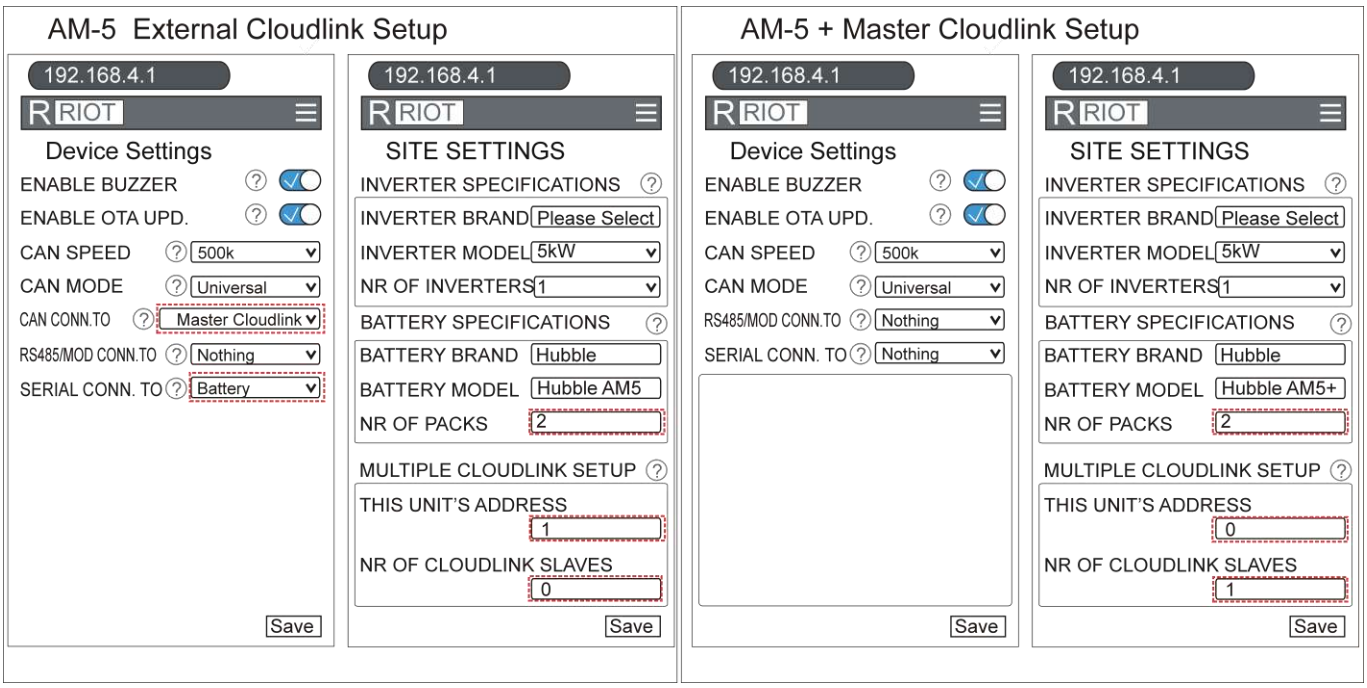

9. OPERATING

The operating section contains the Turn ON/OFF procedure, and descriptions of the battery indicators, Cloudlink indicators and battery light bar that can be used to determine the operational status of the battery.

9.1 Battery First Turn On

This procedure is aimed at testing the battery on its own, to verify that it is functioning properly.

- Ensure that the battery is isolated from the rest of the system by opening the DC isolation device mounted between the battery and inverter.
- Verify that all cables are connected correctly, with correct polarity where applicable and securely tightened.
- Turn on a single battery (if multiple batteries are used), using the power ON/OFF switch ON/OFF in the wiring compartment.
- Verify the battery condition using the battery status and SoC indicators inside the wiring compartment. If the alarm indicator is lit, do not proceed, and contact the battery supplier.
- Verify that the Cloudlink power indicator is lit and that the light bar on the front of the battery unit is active.
- Measure the battery voltage. Do not proceed if it is not within 49 to 54 Vdc.
- Turn the battery off, using the power ON/OFF switch ON/OFF in the wiring compartment.
- Repeat the above for the remaining batteries.

9.2 Turn On the System

Once it has been established that the battery/batteries function properly on its own, the rest of the system can be connected to the battery.

WARNING: Please follow the turn on steps as described in the inverter's manual if they differ from the steps below.

- All devices are turned off.
- Battery/batteries turned off, using its power on/off switch.
- The inverter is switched off, using its power on/off switch.
- The battery, grid, load and solar isolation devices are opened / disconnected.
- All the communication cables are connected.
- Dipswitches are correctly set as in Section 6.

9.2.1 Turn On Procedure

- Close the battery DC isolation device to connect the battery/batteries to the inverter.
- Turn on the master battery using its power on/off switch ON/OFF .
- Verify that the Cloudlink power indicator is lit and that the light bar on the front of the battery unit is active.
- Turn on the inverter using its power on/off switch.
- Access the Inverter BMS CAN Information page.
- Confirm that the CAN comms is working as in the next section.
  When CAN comms between the "Master" and "Inverter" are working as expected you should see the following:
- On the inverter's BMS CAN information page, the maximum charge and discharge currents should reflect the total allowed for the entire battery bank (and not simply for the AM-5+ "master").

1 x Battery	
Battery Voltage: 53.00V	
Battery Current: 0A	Battery Charge Voltage: 56.0V
Battery Temp: 23.5C	Charge Current Limit: 100A
SOC: 86% SOH: 100%	Discharge Current Limit: 100A

- Turn on the slave battery using its power on/off switch ON/OFF .

2 x Batteries = 1 x Master and 1 x Slave	
Battery Voltage: 53.00V	
Battery Current: 0A	Battery Charge Voltage: 56.0V
Battery Temp: 23.5C	Charge Current Limit: 200A
SOC: 86% SOH: 100%	Discharge Current Limit: 200A

- On our monitoring portal, the master CloudLink will report the total number of batteries as the sum of the packs.

9.3 Configure The Inverter Battery Settings

The intention of the steps below is only to power the inverter from the battery, to allow configuration of the battery settings - not to commission the entire system.

- Configure battery related settings on the inverter

Settings that should be configured typically include the battery type, maximum charge and discharge current, maximum charge voltage, cut off voltage. Inverters using CAN communication with the battery also require setting of the shutdown, low battery and restart SoC percentages.

If a CAN communication link is used between the inverter and the battery, most of these settings will be obtained automatically through the CAN bus, but it is recommended to still configure the settings should the CAN communication fail.

If no communication link is used, the battery will be operated according to the applicable battery settings on the inverter, which must be set manually to the correct values.

Please consult the Hubble website at https://www.hubbleenergy.com/ for the latest recommended settings. It is very important to use the correct setting values - incorrect values can damage the battery.

As an example, set the following parameters for an Inverter not utilizing CAN to allow safe usage of the battery.

Axpert:

Battery type:	Customer setting
Bulk / Equalize voltage:	55.2 V
Float voltage:	55.2 V
Cut-off voltage	49 V
Charge current (recommended):	50 A
Discharge current (max):	100 A
Battery equalisation:	DO NOT ACTIVATE THIS FUNCTION

Equalisation is only applicable to lead acid type batteries and could damage your Lithium battery.

CAN enabled inverter examples:

Sunsynk:

Battery Type	**Battery Charge**	**Shutdown**
Select Lithium, Can and Protocol “0”	Do not activate equalisation	Shutdown settings under your discretion
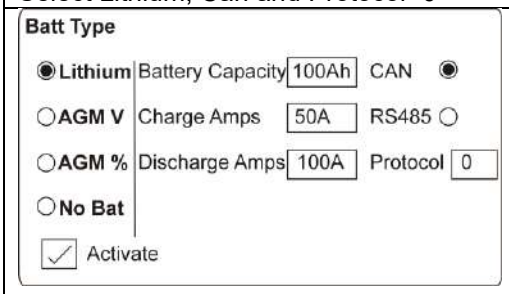	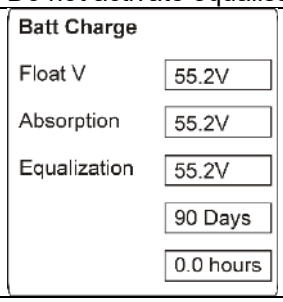	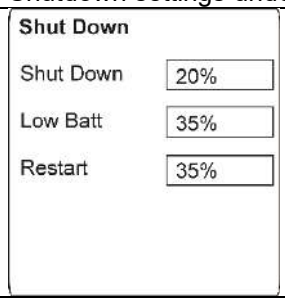

Proceed to section 10: Cloudlink Setup.

9.4 Turning The System Off

WARNING: Please follow the turn off steps as described in the inverter’s manual if they differ from the steps below.

- Turn of the load circuit breaker.
- Switch off the inverter using its power on/off switch.
- Switch off the solar.
- Switch off the battery using its power on/off switch.
- If required, open the isolating devices to isolate the grid, load, solar and battery from the inverter

10. CLOUDLINK SETUP

Each AM-5+ has an integrated Cloudlink. The CloudLink in the master AM-5+ battery communicates with the slave battery/s CloudLink/s.

Only the master Cloudlink requires to be configured and is described in more detail in the following section.

10.1 Connecting Using Your Mobile Device

Ensure that your mobile data is disabled. This will prevent your mobile device from disconnecting from the Cloudlink during the configuration procedure.

10.2 Configuration Mode

Step 1: Place the Master battery Cloudlink into configuration mode by pressing the Mode button marked “M” on the battery wiring panel until **one beep**, followed by **2 consecutive beeps**:

- Then, release the Mode button.
- The Cloudlink is now in Configuration Mode.
- This can be observed by viewing the flashing LED bar on the front LID – “The green LED bar sweeps from left to right. When only the last few LEDs on the right begin flashing, it indicates that the configuration mode is timing out.

Step 2: Connecting to the RIOT CloudLink

Open the WiFi menu on your mobile device (also possible on a laptop).

Connecting to the RIOT CL	Menu
• Scan for available networks. • Locate the Cloudlink WiFi access point (RIOT CL-xxxx *see example below. • Select the “RIOT CL-#” Wi-Fi connection and connect to the Cloudlink device. • If you do not see the RIOT/Cloudlink WiFi connection, refresh your WiFi list. • If after ten seconds you do not see the RIOT/Cloudlink WiFi connection, please confirm that the LED bar is still flashing in sequence as described in the Step 1. • If they are no longer flashing then return to the beginning of Step 1, and repeat the process	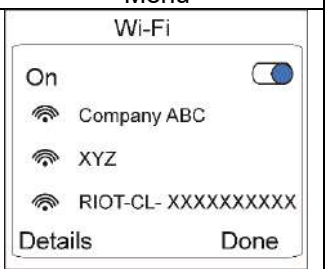
• Connect to the RIOT-CL • If your mobile device prompts you to disconnect from the “RIOT CL-#” network, please select “connect anyway” or “keep connection” to proceed. • The AP displays part of the unique serial number for your device. • Use this number to identify the device if you have multiple devices. • No password is required to connect as the “RIOT_CL#” is an open network • Once connected the connection status changes to “Connected without internet/not secured”.	
• Open your browser on your mobile device or computer, we recommend using Google Chrome. • Enter the following below address in the URL box at the very top of the page: http://192.168.4.1 and the following information page is displayed	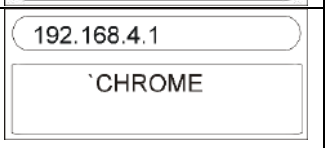

Information Page:	
Software Version must be equal or greater than V5.0.6 →	

Device Settings: Select Device Settings by selecting from this menu	Menu
CAN Speed • Must be the same for all devices on the CAN Bus (typically 500k) CAN Mode • As per the inverter requirements, e.g. for a Victron system select Victron, for a Deye, Sunsynk system select Universal. For Solis select Solis. RS485 Conn. To • As per the site requirements, if the inverter information is to be displayed on the Cloudlink Monitoring site, and the RS485 wires are connected, then select “Inverter Serial Conn. To • As per the site requirements. This will only be used if the CloudLink is being used to monitor an Axpert-type inverter.	
Save the settings	
Inverter Specifications Inverter Brand • Select the Inverter from the dropdown list Inverter Model • Select the inverter wattage Nr of Inverters • Number of inverters installed **Battery Specifications** Note that the Cloudlink auto detects the Brand, Model and Nr of Packs • Battery Brand = Hubble • Battery Model = AM-5+ • Nr of Packs = Site dependant **Multiple Cloudlink Setup** The Units address • 0 (CloudLink’s with address 0 will act as CloudLink masters) Nr Of Cloudlink Slaves **Energy Meters** No settings changes are required Baud Rate - Energy Meter Baud Rate if installed Start Address - Energy meter address Number Of Devices - Number of energy meters installed	
Save the settings and Reboot the Cloudlink	

Wifi Setup – Click the Menu to expand the options – Select WIFI

Click the Scan Button	Available Networks appear here	Select you network and enter password
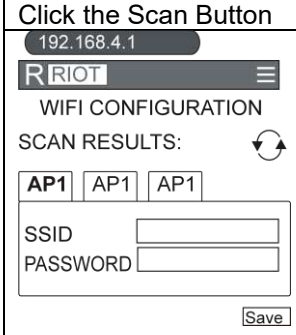		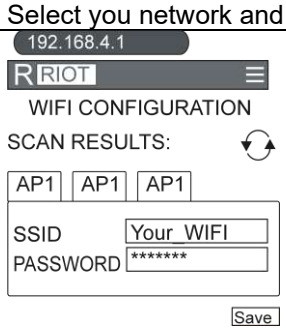

Select Save and Then Exit.

11. BATTERY LIGHT BAR DISPLAY

The battery contains a light bar that is controlled by the Cloudlink, which communicates with the battery BMS to obtain battery parameters that can be displayed.

The light bar displays battery parameters such as state of charge (SoC) and power flow direction (charging / discharging) using various colours and animations.

When the battery is turned on or the Cloudlink is rebooting, a moving rainbow pattern will be displayed while the Cloudlink establishes communication with the BMS.

- If communication with the BMS is established, it will display the battery SoC and power flow direction, using colour and animation.
- If no communication could be established a partial orange bar will be displayed.

	LIGHT BAR DISPLAY (NORMAL MODES)		
CLOUDLINK MODE	**REASON FOR THIS STATE**	**INFO DISPLAYED**	**DISPLAY DESCRIPTION**
Boot	Battery turned on. Cloudlink rebooted.	Cloudlink booting, trying to establish communication with BMS.	An animated moving rainbow pattern is displayed, one colour at a time.
Normal	BMS communication established.	Battery SoC and power flow	The SoC percentage is indicated by the portion of the light bar displayed in blue, with the remainder in pink. The power flow is displayed by an animated moving pulse, superimposed onto the SoC display. • A pulse travelling from the left to the right indicates that the battery is charging (SoC is increasing). • A pulse travelling from the right to the left indicates that the battery is discharging. 10% SOC 50% SOC 90% SOC
	BMS communication failure.	Warning (BMS communication failed)	The left 40% portion of the bar will be orange.
Configurating	Provisioning Mode		An animated sweeping green from left to right

12. BATTERY INDICATORS AND BUZZER

The battery on, run and alarm indicators together with the SoC indicators (located inside the wiring compartment) can be used to determine the status of the battery, using the tables below.

The SoC indicators turn on linearly as the battery state of charge increase. Six states of charge indicators are used on the Blade battery, each representing a 16.7 % capacity span. The first indicator will be on if the SoC is between 0 to 16.67 %, the second from 16.67 to 33.3% etc. While the battery is charging, the highest active SoC indicator will flash.

12.1 BMS Battery Indicators

For explanation:

○	Led is OFF	●	Led is ON
○	Led is OFF	●	LED is ON

1	Blinks every second	3	Blinks every 3 seconds
5	Blinks every 5 seconds	15	Blinks every 15 seconds

BATTERY STATUS AND MODE	RUN	ALARM	SOC CAPACITY #1	#2	#3	#4	#5	#6	NOTES
Battery power off									
Battery turned off / Sleep mode	○	○	○	○	○	○	○	○	All indicators off.
Standby									
Normal	5	○	◣ ○ ○ ● ● ● ●						Standby mode. The current SoC is displayed.
Alarm Low cell voltage	1	3							Standby mode with low voltage condition present.
Charging									
Normal	●	○	◣ ○ ○ 1 ● ● ● Highest active SoC indicator flashing.						
Alarm	●	3	◣ ○ ○ 3 ● ● ● Highest active SoC indicator flashing.						Alarm indicator is off for an over voltage alarm.
Protect Over Current	○	●	○	○	○	○	○	○	BMS disable further charging.
Discharging									
Normal	3	○	◣ ○ ○ ● ● ● ● Highest active indicator lit.						
Alarm	3	3	◣ ○ ○ ● ● ● ● Highest active indicator lit.						
Protect Over current Short circuit Temperature Reverse polarity	○	●	○	○	○	○	○	○	BMS disable further charging and discharging.

13. CLOUDLINK INDICATORS

The Cloudlink indicators indicate whether the Cloudlink is powered, the status of the Wi-Fi connection, if any devices are connected to any of the communication buses and if the Cloudlink itself is still operating.

When the Cloudlink is in a special mode, the Wi-Fi, Comms and Status indicator will all flash.

13.1 CLOUDLINK INDICATORS

INDICATOR	FUNCTION	OFF	FLASH	ON	DESCRIPTION
Power	Indicate if the Cloudlink is powered.				The Cloudlink is unpowered. The Cloudlink is powered.
Wi-Fi	Indicate the status of the Wi-Fi connection.				No Wi-Fi networks could be found. Connected to a Wi-Fi network, but the internet is not accessible. Connected to a Wi-Fi network with internet access available.
Comms	Indicate if a communication connection exists to the battery, inverter and/or other 3rd part equipment such as energy meters.				No serial or CAN communication to devices present (e.g., no battery or inverter connected). Serial or CAN communications with one device established. Serial or CAN communications with more than one device established.
Status	Indicate if the Cloudlink is still functioning.				After a Cloudlink reboot the light flashes very quickly for about 5 times. Thereafter it flashes once every 15 seconds to indicate the Cloudlink is operational / alive.

14. DETAILED BMS FUNCTIONS

The primary function of the Battery Management System (BMS) is to calculate the battery's State of Charge (SoC) and State of Health (SoH) and to protect the battery cells from damage by disconnecting the charging path, discharging path, or both during abnormal operating conditions.

Additional functions performed by the BMS include:

- Charge current limiting – Regulates and limits the charging current to safe levels.
- Passive cell voltage balancing – Ensures all cells reach the same voltage to maintain balanced performance and extend battery life.
- Dry contact outputs – Provides alarm or protection signals that can be used to trigger an external device or system response.
- Sleep and wake-up functionality – Prevents deep discharge by placing the battery into low-power mode when required and restoring it when safe to do so.

14.1 Buzzer

In the event of a short-circuit protection event, the buzzer will emit a beep every 2 seconds.

If a short-circuit condition is detected three consecutive times, the short-circuit protection will become locked, and the buzzer will stop beeping. When this occurs, disconnect the battery and wait a few minutes before switching it back on.

After clearing the fault, it may take up to 5 minutes for the BMS to confirm that conditions are safe and resume normal operation.

14.2 Charge Current Limiter

The BMS has an advanced current limiting function that allows the charging current to be limited to 20 A if the charging current exceeds the battery charge current limit.

The default start-up condition of the charge current limiter is to activate when the charge current exceeds the rated battery charge current limit.

After 10 minutes the charge current limiter will be turned off and the charge current level re-evaluated.

If the current still exceeds the threshold level, the current limiter will be turned on again, otherwise it will stay turned off.

14.3 Cloudlink

The battery contains an integrated Wi Fi enabled monitoring system, called Cloudlink, which performs the following functions:

- Remote monitoring and management.
- Ensures the latest Cloudlink firmware is obtained automatically, using over-the-air (OTA) firmware updates.
- Control the light bar mounted on the battery enclosure.
- Provides the connection access ports for all the communication interfaces/buses.
- Communicates with the BMS to allow monitoring and control.

14.4 Communication Interface Ports

The Cloudlink has three communication interface ports.

- 1x RJ45 port labelled MON, containing CAN bus, RS485 bus and RS232 interface.
- 2x RJ45 ports labelled CAN, containing CAN bus, RS485 bus and RS485 BMS LINK bus.

Their usage is as follows:

- The RS485 bus signals can be interfaced with 3rd party inverters that do not have a CAN bus and are supported by Hubble.
- The RS485 BMS Link bus signals are used when paralleling of batteries is required, to allow communication between the batteries.
- The CAN bus signals is specifically to be used to interface with 3rd party equipment like inverters, which require battery parameters to automatically configure charge and discharge settings to allow safe charging and discharging of the battery.
- The RS232 signals can be used to connect with an inverter (if supported) and for reserved use by Hubble to interface with the Cloudlink.

14.5 Dry Contact

The dry contacts are potential free normally open contacts, that can be used to signal when the BMS experiences an alarm or protection condition. Under normal conditions the contacts are open.

When an alarm or protection event occurs, the contacts close.

Two dry contacts are available on a four-pin connector:

- Pins 1 and 2 will close when there is a low battery alarm.
- Pins 3 and 4 will close when there is a protection or fault condition.

14.6 Protection

The battery incorporates an integrated electronic circuit breaker within the BMS. This electronic protection device can disconnect the charging path, the discharging path, or both, whenever abnormal operating conditions are detected.

The electronic circuit breaker activates to protect the battery and its internal cells against conditions such as:

- Overcharge
- Over-discharge
- Overload
- Short circuit
- Over-temperature
- Under-temperature
- Other abnormal or unsafe states

However, despite having this internal protection, and a DC circuit breaker, fused disconnector/s must still be installed to provide proper system-level protection and to comply with standard installation safety practices.

14.7 Passive Cell Voltage Balancer

Due to normal manufacturing tolerances, individual battery cells can vary slightly in capacity, self-discharge rate, and internal impedance.

When these cells are connected in series to form a battery, such differences can lead to cell voltage imbalances, especially during charging. Cells that reach higher voltages than others may experience accelerated degradation over time.

To prevent this, the BMS incorporates a passive cell voltage balancer, which ensures that the voltage across all cells remains closely matched.

The balancer activates when the battery is near its full-charge voltage and the voltage difference between cells exceeds a predefined threshold.

14.8 Sleep And Wake-Up Function

To protect the battery from becoming fully discharged, the BMS will place the battery into a low-power sleep mode, reducing internal consumption to the minimum. The battery will enter sleep mode if any of the following conditions occur:

Over-discharge protection timeout:

- The battery has remained in over-discharge (under-voltage) protection for more than 5 minutes.
- (To avoid this, the battery must be recharged above the under-voltage release level within the 5-minute period.)

Extended standby condition:

- The battery has been in standby for more than 24 hours, defined as no charging current, no discharging current, and no communication activity.

Wake-Up Conditions:

The BMS will automatically wake the battery from sleep mode when any of the following are detected:

- A charging current is applied to the battery.
- The reset button is pressed and held for more than 1 second.
- Communication activity is detected on the RS232 or CAN bus (under certain supported conditions).

14.9 Reset Button

When the BMS is in the sleep state, pressing the reset button for more than 1 second will reactivate the BMS protection board.

When the BMS is operating normally, pressing and holding the button for 3 to 6 seconds will place the BMS into the sleep state.

Pressing and holding the button for longer than 6 seconds will perform a full reset of the protection board.

14.10 Remote Monitoring and Management

When connected to a Wi Fi network, Cloudlink can collect data directly from the battery and inverter to allow remote monitoring and management of the power system through the Hubble Cloudlink application on a phone or by using the Hubble Cloudlink Portal website on a phone or computer.

14.11 Light Bar Control

The light bar displays battery-related parameters such as the State of Charge (SoC) and the power flow direction (charging or discharging). In addition, it can also display special Cloudlink modes that are used when configuring the Cloudlink.

These special modes are shown only when the Cloudlink enters a configuration mode—either through the Mode button on the Cloudlink interface or when an unsolicited over-the-air (OTA) update is in progress.

Once the special mode is exited—whether manually, automatically, or by timeout—the light bar will return to displaying the standard battery-related parameters.

15. BATTERY CARE

To take care of your battery and prolong its life please take note of the following:

15.1 Battery storage and disposal

- Store the battery in a dry and well-ventilated area within the allowed storage temperature range, preferably at a cool 25°C temperature.
- Provide a refresh charge if the battery has been stored for longer than 5 to 6 months, prior to installation.
- Dispose of in accordance with local regulations.

15.2 Cell Balancing

Ensure that that the batteries are fully charged at least once every 7 days to enable the BMS cell balancer to activate and perform cell balancing, this will prolong and protect the cell life.

The cell balancer only activates on 100 % charge. If the balancer does not activate for an extended period, the cells could eventually become unbalanced.

This can cause the performance of undercharged cells to degrade and could eventually result in greatly reduced cell cycle life.

This is especially important in complete off-grid installations without any utility power, where battery charging is reliant on limited alternative energy sources of power, that might not be sufficient to fully charge the battery every day.

15.3 Charging And Discharging

- Ensure the battery terminals are connected securely and with correct DC polarity.
- The battery must only be charged using an appropriate charger / inverter.
- Never use a modified or damaged charger / inverter.
- Do not exceed the rated battery charging voltage.
- Do not exceed the rated charging current.
- Do not exceed the rated discharging current.
- Do not use the battery in freezing conditions.

15.4 Connecting Third-Party devices

It is strictly forbidden to access or interfere directly with the battery BMS or Cloudlink through third-party devices such as monitoring devices or logging devices that are not Hubble Energy products.

15.5 Handling

- Do not expose the battery to direct fire.
- Do not short circuit the battery.
- Avoid excessive physical shock or vibration.
- Do not disassemble or deform the battery.
- Do not immerse the battery in water.
- Do not use the battery with other battery models, types, or brands.
- Keep out of the reach of children.

15.6 Installation Environment

- Do not install the battery in damp or wet environments.
- Never install the battery where there is corrosive or explosive gas present.
- Do not install the battery outdoor or in direct sunlight – only indoor installations are allowed

15.7 Maintenance and Repairs

All repairs are only to be done by Hubble Energy or an authorised repair centre. The floor standing wheel-mounted battery is maintenance-free, but you should carry out the following routine checks.

- Check the enclosure and wiring compartment for dust or debris.
- Inspect cables for signs of strain or bending.
- Confirm monitoring system connectivity (if used).

Information published on this manual is correct as of the date published on this manual.

Please ensure you have the latest manual which can be obtained from our website at *https://www.hubbleenergy.com*

16. COMPLETION

Once all the above steps have been completed you can proceed to follow the start-up instructions given by your inverter manufacturer. If you have any difficulties with setting up your system, please contact our Technical Support Department via support@hubbleenergy.com

Be sure to include the following information in your initial email so that we can provide you with timely assistance:

Inverter make & model.
Model & number of connected batteries.
Are your batteries in series or parallel?
A brief description of your system and any issues you may be having.
If possible, images of your power system.
Your contact details.

16.1 Hubble Energy Apps

The following apps can be downloaded from:

Android Users:

Hubble Installer App - Hubble Installer - Apps on Google Play

Hubble Cloudlink Monitoring App – Hubble Cloudlink - Apps on Google Play

iPhone Users:

Hubble Installer App - Hubble Installer v3 App - App Store

Hubble Cloudlink Monitoring App - Hubble Cloudlink App - App Store

CloudLink Monitoring Portal:

CloudLink Portal - Hubble Cloud | Login

Cloudlink Portal New User Registration - Hubble Cloud | Sign up

Hubble reserves the right to make alterations and updates to this document as required.