Quick Installation Guide

X1－Hybrid 3.0KW-7.5KW

II Tool Preparation

Hammer drill（Bit φ10）	DC Voltage range ≥1100 V DC	Torque screwdriver(Crosshead M5)	Socket wrench set(Hexagon)
OT terminals press clamp (0.5~6mm²)	Diagonal pliers	Utility knife	Multifunction terminal crimping tool (RJ45)
Diagonal pliers	Hexagon keys	Rubber hammer	Tape ruler
Crimping Tool	Marker	Euro terminal crimping tool	Spirit level

I Packing List

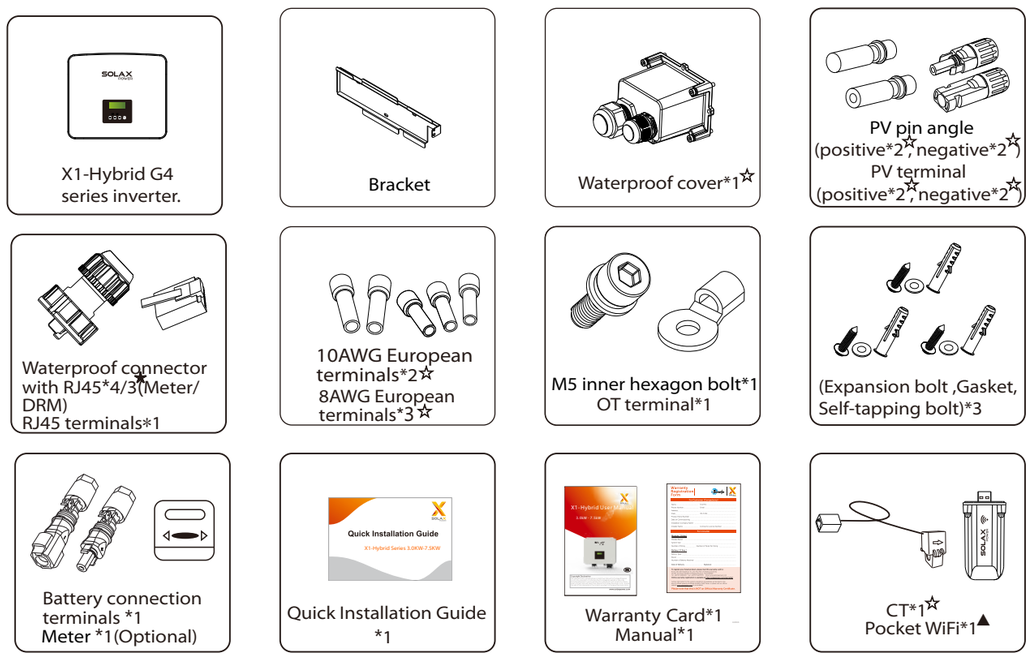

Note: "☆"attachments are not included in the M-series inverter attachment package and will be included in the X1-Matebox.
"▲"is the standard accessory in the M-series inverter and the optional accessory in the D-series inverter.
"★"The inverter in Australia needs to be connected to DRM, which is 1 more communication line adapter than that in other countries, while the other countries only need 2 communication line adapters.

III Mounting Steps

a) Use a marker to mark drilling holes of the bracket on the wall .

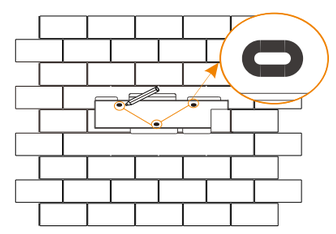

a)

b) Drill holes at marked spots with depth of 80mm.

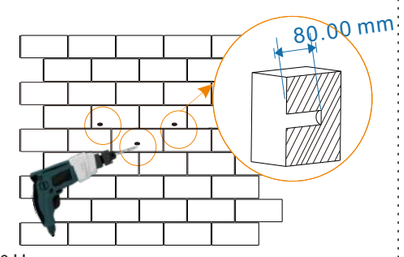

Φ10 Hammer drill

b)

c) Insert expansion bolt into the hole, use rubber hammer to knock the expansion screw bolt into the wall.

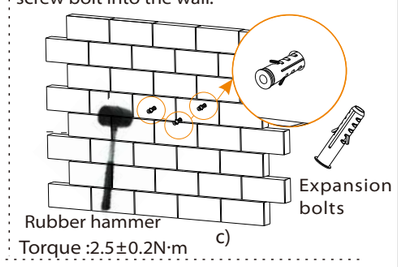

c)

d) The bracket is aligned with the screw uses the inner hexagonal wrench to screw the tapping screw until the expansion bolt "bang" is heard.

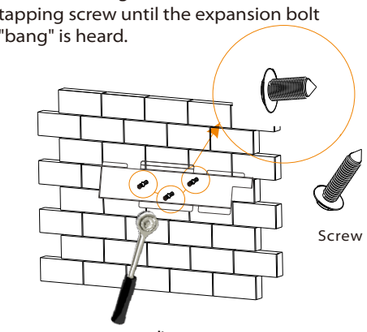

d)

e) Hang the buckle on the inverter to the corresponding position of the backplane.

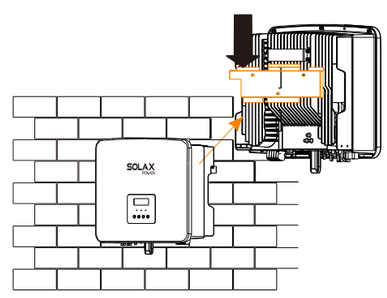

e)

f) Use the inner hexagonal wrench to tighten the inner hexagonal screw on the right side of the inverter.

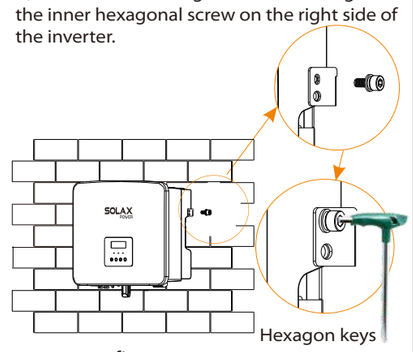

f)

IV PV Connection

The PV port wiring of X1-Hybrid G4 M series inverter has been completed. On X1-Matebox, the D series needs to be wired according to the following steps.

Step 1. Turn off the DC switch, connect the PV module, prepare a 12AWG PV cable, and find the PV (+) terminal and PV (-) terminal in the package.

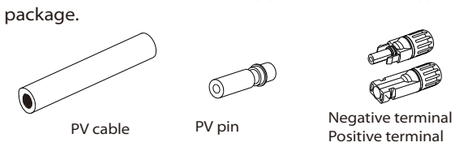

Step 2. Use a wire stripper to strip the 7mm insulation layer of the wire end.

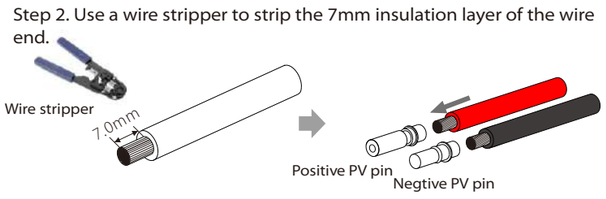

Step 3. The PV connector is divided into 2 parts, to the plug and the fastening head.Pass the cable through the fastening head and the alignment plug.Note that the red and black lines correspond to different pairs of plugs.Finally, force the cable into the plug and hear a "click" to indicate that the connection is complete.

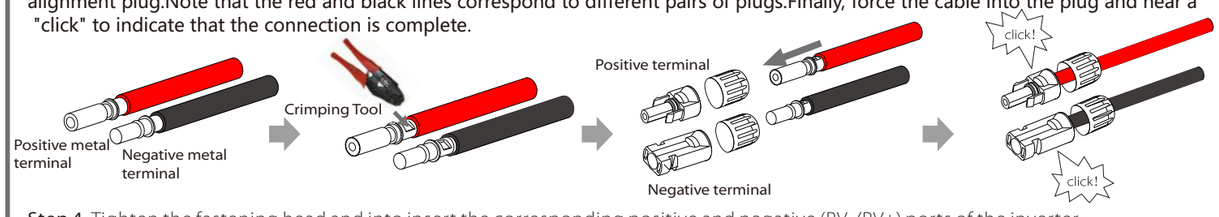

Step 4. Tighten the fastening head and into insert the corresponding positive and negative (PV-/PV+) ports of the inverter.

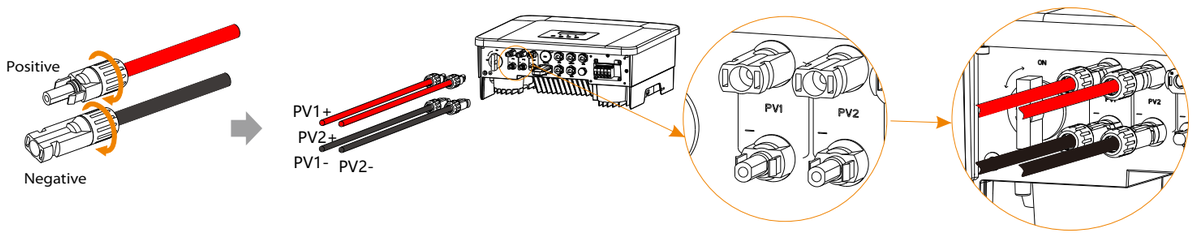

V Grid and Off-grid Connection

Diagram A: Neutral line and PE line are separated from each other, and the common load is connected to the off-grid port;(For most countries)

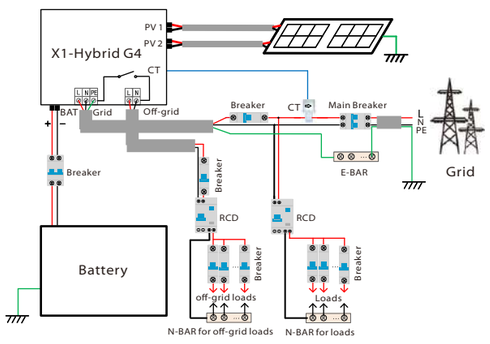

Diagram B: Neutral line and PE line are separated from each other, all loads connect to the Off-grid port;(For most countries)

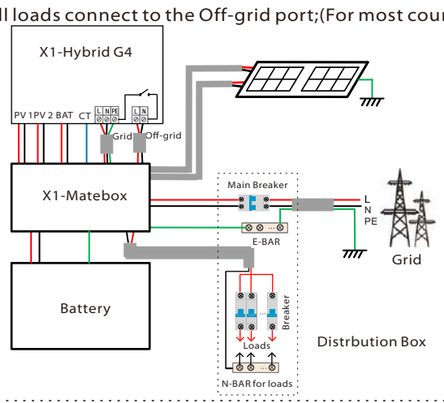

Diagram C: Neutral line and PE line are combined togeter, and the common load is connected to the off-grid port;(Apply to Australia)

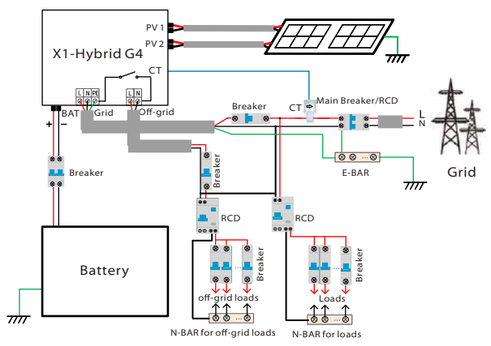

Diagram D: Neutral line and PE line are combined together, all loads connect to the Off-grid port;(Apply to Australia)

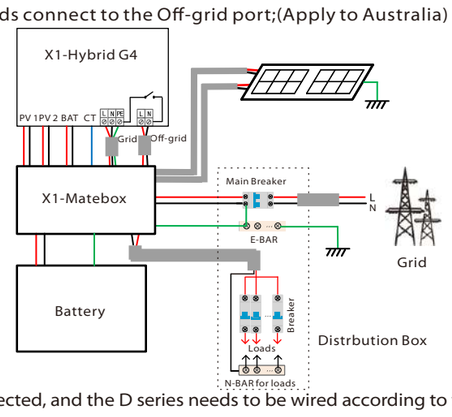

The Grid and Off-grid ports of X1-Hybrid G4 M series inverter have been connected, and the D series needs to be wired according to the following steps.

Step 1. Prepare a Grid cable (three-core wire) and an Off-grid cable (two-core wire), and then find the European terminal and waterproof cover in the accessory bag.

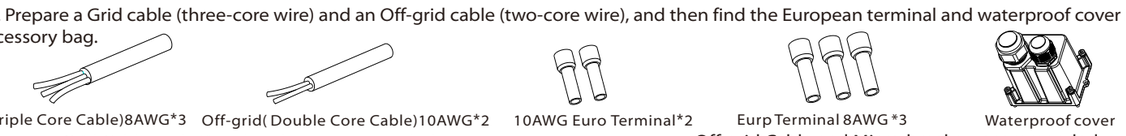

Grid Cable and Micro-breaker recommended

Model	X1-Hybrid-3.0-D	X1-Hybrid-3.7-D	X1-Hybrid-5.0-D	X1-Hybrid-6.0-D	X1-Hybrid-7.5-D
Cable (copper)	4-6mm²	6-8mm²	8-10mm²	8-10mm²	8-10mm²
Micro-Breaker	32A	40A	50A	50A	50A

Model	X1-Hybrid-3.0-M	X1-Hybrid-3.7-M	X1-Hybrid-5.0-M	X1-Hybrid-6.0-M	X1-Hybrid-7.5-M
Cable (copper)	3-4mm²	3-4mm²	4-6mm²	4-6mm²	6-8mm²
Micro-Breaker	25A	25A	32A	32A	40A

Off-grid Cable and Micro-breaker recommended

Model	X1-Hybrid-3.0-D X1-Hybrid-3.0-M	X1-Hybrid-3.7-D X1-Hybrid-3.7-M	X1-Hybrid-5.0-D X1-Hybrid-5.0-M	X1-Hybrid-6.0-D X1-Hybrid-6.0-M	X1-Hybrid-7.5-D X1-Hybrid-7.5-M
Cable (copper)	3-4mm²	3-4mm²	4-6mm²	4-6mm²	6-8mm²
Micro-Breaker	25A	25A	32A	32A	40A

Step 2: The Gridand Off-grid cables go through the corresponding Grid and Off-grid ports of the waterproof cover. Remove the 12mm insulation layer at the end of the wire. Insert the European-style terminals respectively, and make sure that the stripped ends are inserted into the European-style terminal ,and finally use crimping pliers to press tightly.

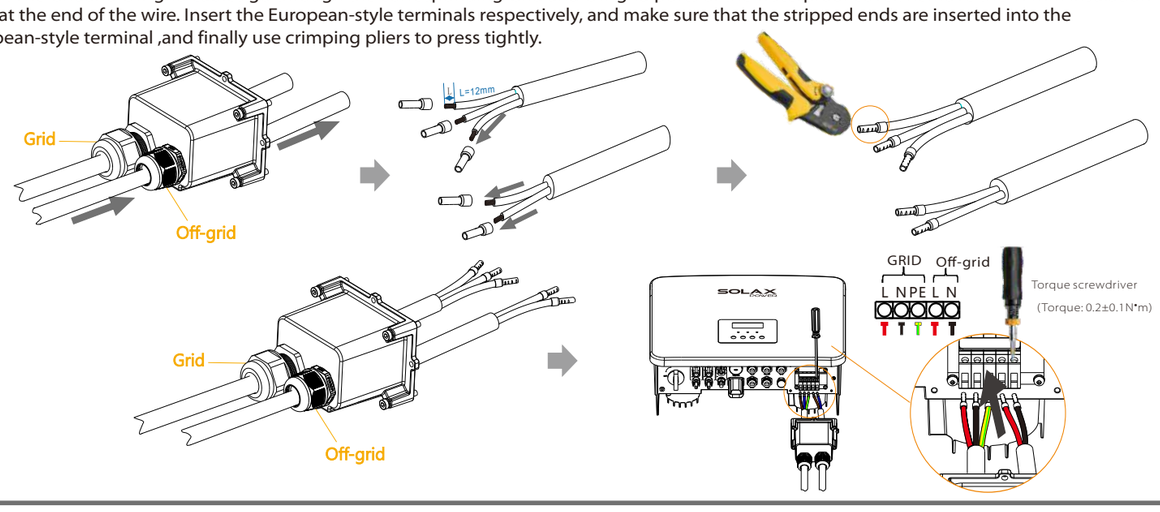

IV Battery Connection

Battery connection diagram:

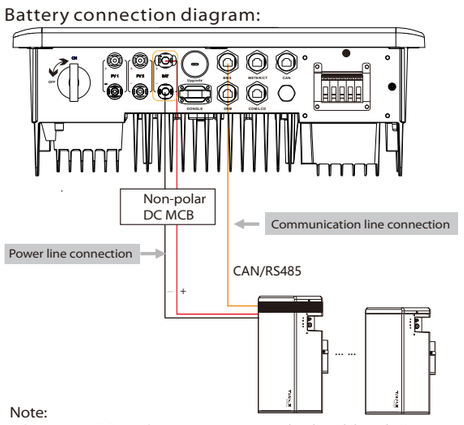

Note:
When using SOLAX batteries, the recommended number of battery modules(HV10045/HV10063/HV10058) is 1-3 units, and battery controller MC0500unit.

Battery port connection line of the X1-Hybrid G4 M series inverter is on the X1-Matebox, just connect it. It is necessary to wire the D series according to the following steps.

Step 1. Prepare 8 AWG battery power line , find the DC plug (+), DC plug (-) in the accessory bag.

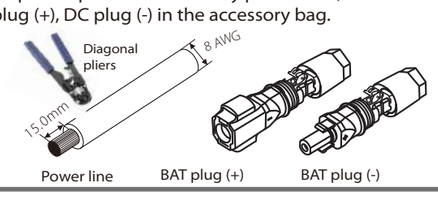

Step 2. Insert the stripped cables into the DC plug (-) and DC Plug (+) respectively.

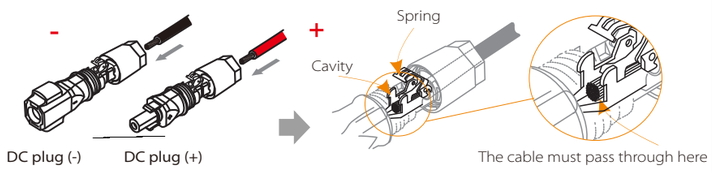

Step 3. Press down on the spring by hand, you can hear a click sound, then push the ends together, and tighten the screw joints.

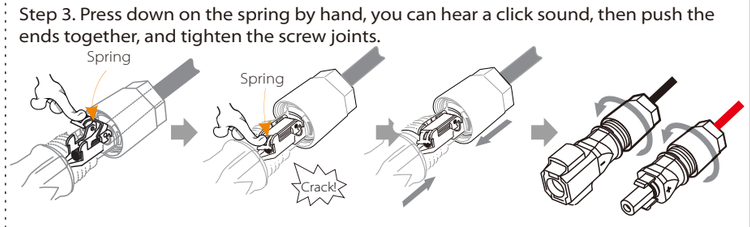

Step 4. Insert the battery power lines into the corresponding BAT port (+), (-) of the inverter.

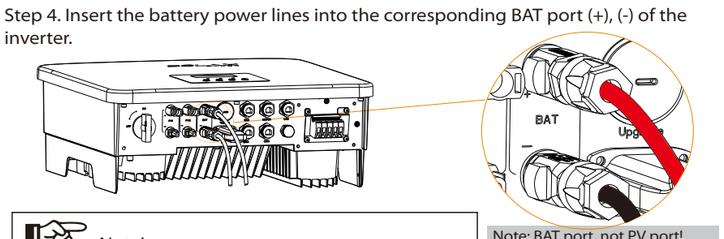

Note: BAT port, not PV port!

Note: The positive and negative wires of the battery are not allowed to be reversed!

Note!
After the BMS communication between the battery and the inverter is finished, the battery will work normally.

VI Communication Connection(BMS/Meter/CT/DRM/COM)

- Electric meter connection diagram

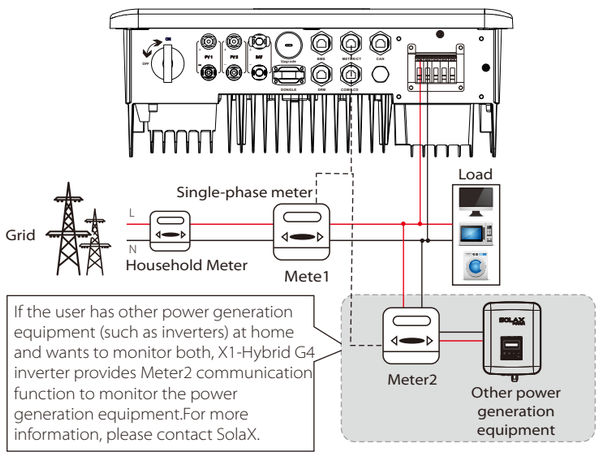

If the user has other power generation equipment (such as inverters) at home and wants to monitor both, X1-Hybrid G4 inverter provides Meter2 communication function to monitor the power generation equipment.For more information, please contact SolaX.

- CT connection diagram

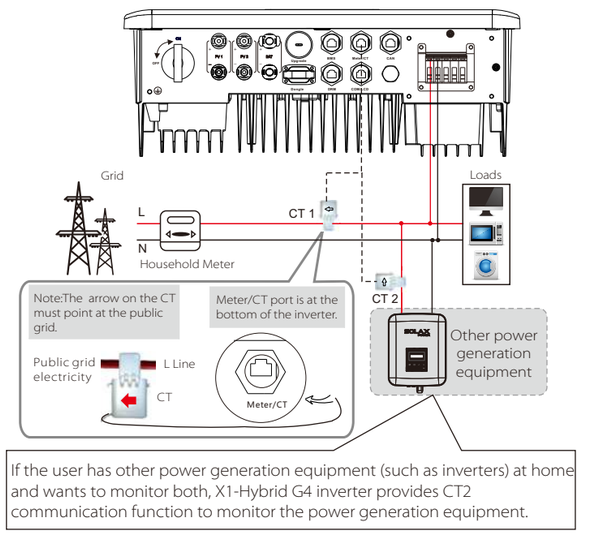

If the user has other power generation equipment (such as inverters) at home and wants to monitor both, X1-Hybrid G4 inverter provides CT2 communication function to monitor the power generation equipment.

- LCD settings

To select CT, you need to enter Use setting ,then enter CT or Meter Setting.

```
CT/Meter Setting
> Select
        CT
```

➢ Meter /CT PIN is defined as follows:

1	2	3	4	5	6	7	8
CT1-1	X	CT2-1	485A	485B	CT2-2	X	CT1-2

1) To connect the Communication line of the CT line, the lines need to be made on both sides, connecting the RJ45 terminal on one side and the Communication line Adapter on the other.

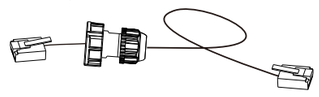

2) One side of the finished cable, Communication line adapter is inserted into the inverter, and one side of the RJ45 terminal is inserted into the CT connection.

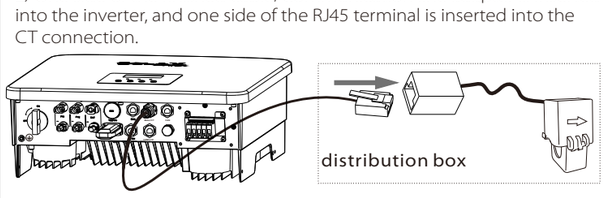

- COM Communication

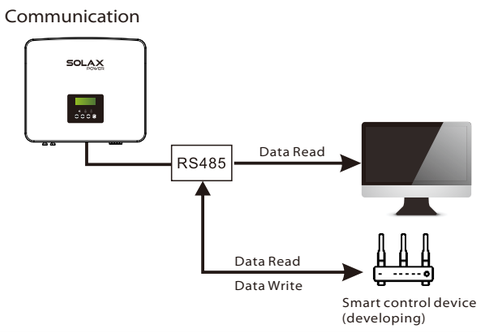

➢ COM PIN Definition

1	2	3	4	5	6	7	8
X	X	Vcc	485A	485B	GND	X	X

➢ The BMS pin is defined as follows:

1	2	3	4	5	6	7	8
BAT_TEMP	GND	GND	BMS_CANH	BMS_CANL	X	BMS_485A	BMS_485B

➢ The DRM pin is defined as follows:

1	2	3	4	5	6	7	8
DRM1/5	DRM2/6	DRM3/7	DRM4/8	+3.3V	DRM0	GND	GND

- Communication Connection Steps

Step 1. Prepare a communication cable, and then find the communication adapter in the accessory bag.

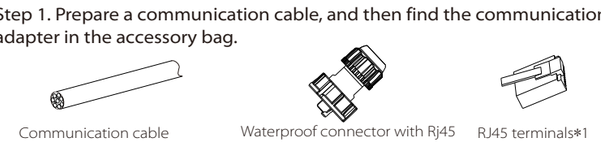

Step 2 Insert the communication cable through the communication adapter, and peel off the outer insulation layer of15mm.

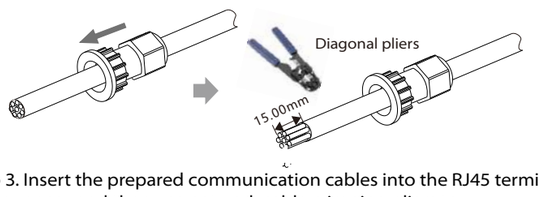

Step 3. Insert the prepared communication cables into the RJ45 terminals in sequence , and then use network cable crimping pliers to press them tightly.

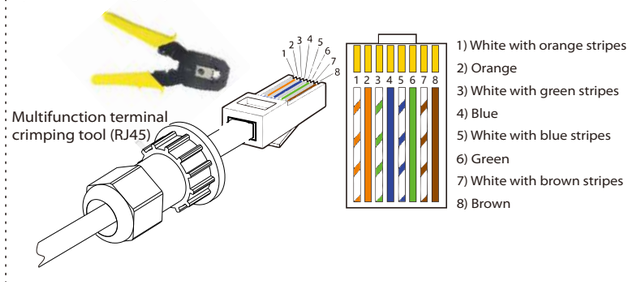

Step 4. Tighten the completed Meter/CT/BMS communication line and tighten the waterproof plug.

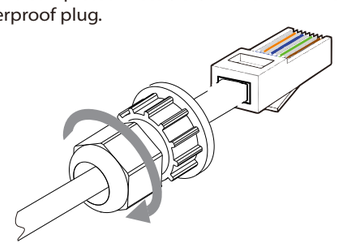

Step 5: Finally, find the corresponding COM/METER/CT/DRM poets on the inverter and insert the communication cable into the corresponding ports.

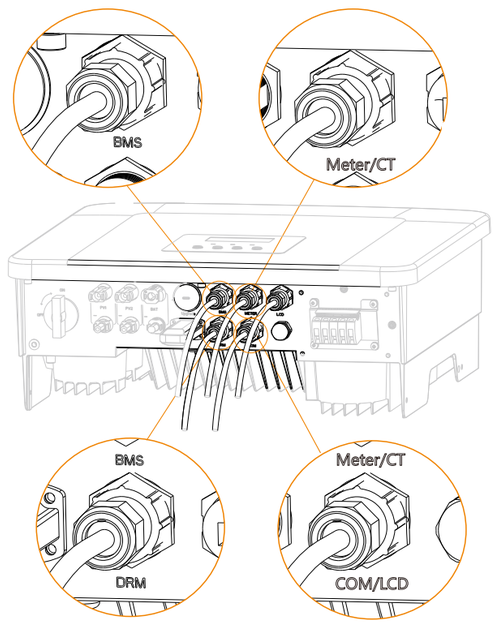

IX Grounding Connection(manodatory)

The ground wire port of X1-Hybrid G4 M series inverter has been connected, and the D series needs to be wired according to the following steps.

Step 1. Prepare a one-core cable (12AWG), and then find the ground terminal in the accessories.

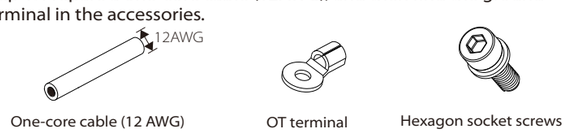

Step 2. Strip the grounding cable insulation(lenhth"L2), insert the stripped cable into the ring terminal, and then clamp it.

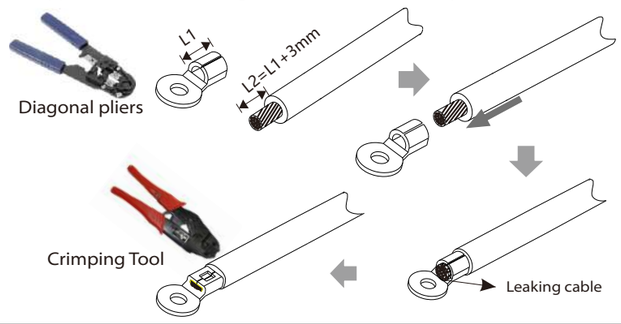

Step 4. Find the ground connection port on the inverter, and screw the ground wire on the inverter with an M5 Allen key.

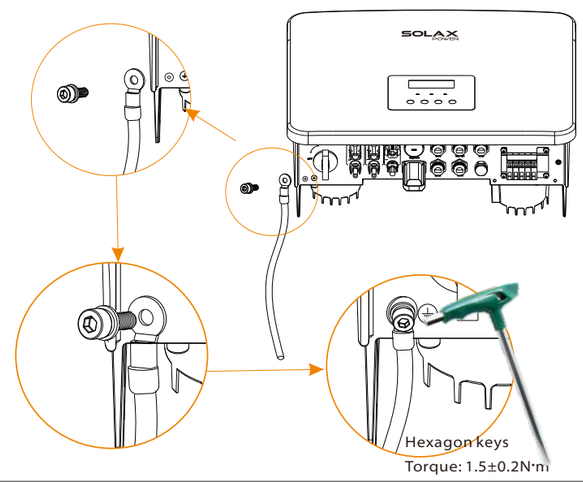

VII Monitoring Operation

➢ WiFi connection diagram

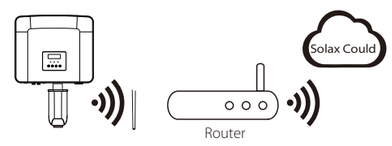

➢ Wireless monitoring accessories connection steps:

Step 1. Of the DONGLE port of the inverter needs to unscrew the screw and take off the cover.

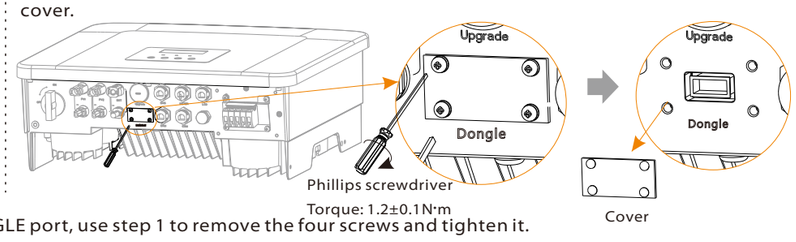

Step 2. Plug the Pocket WiFi Plus into the DONGLE port, use step 1 to remove the four screws and tighten it.

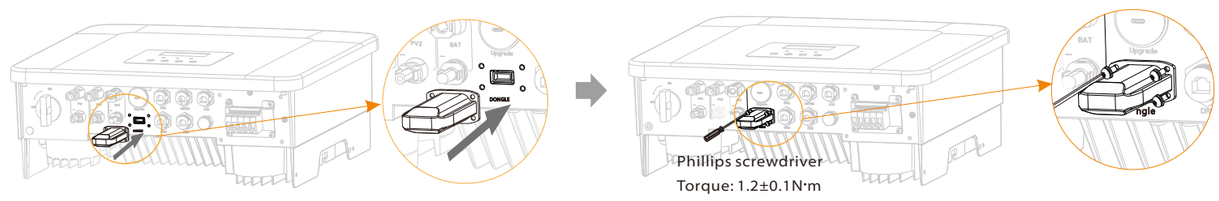

VIII Start Guide

1.Set date time

```
Date time
2017 ->06 <-06
10:19
```

2.Set language

```
Language
English
Deutsch
Italian
```

3.Set the safety standard

```
Safety
Country
>VDE0126
```

4.CT/Meter Setting

```
CT/Meter Setting
CT
>Meter
```

5*.Set export control

```
Export Control
Use Value:
10000W
```

6*.Set work mode

```
Work Mode
>Mode Select
self use
```

7.X1-Matebox Setting

```
X1-Matebox Setting
>disable
 enable
```

5*.Export Control

This function allows the inverter able to control energy exported to the grid.
There are user value and factory value. The factory value is default which can not be charged by user. The user value set by installer must be less than the factory value.

6*.Set work mode

There are 4 work modes for choice. Self use/ Back Up Mode/ Feed in Priority/ Force Time Use
All these work modes is available for on-grid condition only:

Name	Description
Self Use	The self-use mode is suitable for areas with low feed-in subsidies and high electricity prices. ① When the power of PV is sufficient Active Charging or Discharge time period:PV will power the loads firstly, and surplus power will charge to the battery . If the battery is fully charged, then sell the surplus power to the grid;(The inverter will limit the output if Feed-in limit or zero feed-in is needed) (PV > Load ,PV →Load→Battery → Grid) ② When the power of PV is insufficient Active Charging time period: PV will power the loads firstly ,the remaining power will be taken from the grid , the battery will not discharge at this time.(PV > Load ,PV + Grid → Load) Active Discharge time period: PV+BAT will power the loads together. If the power is still not enough, the remaining power will be taken from the grid. (PV < Load ,PV + Battery + Grid → Load) ③ Without PV power Active Charging time period: The grid supplies the loads and also can charge the battery.(PV=0 ,Grid →Load + Battery) Active Discharge time period:The battery will power the home loads firstly.If the battery power is not enough ,the remaining power will be taken from the grid .The inverter will enter into the standby state.(PV=0 ,Battery+Grid→Load) Battery min SOC can be set:10%-100%.
Feed-in priority	The Feed-in priority mode is suitable for areas with high feed-in subsidies, but has feed-in power limitation. ① When the power of PV is sufficient Active Charging time period :PV will power the loads firstly, and surplus power will feed-in to the grid. If the feed-in power has been limited ,the surplus power can charge the battery. (PV>Load ,PV → Load → Grid → Battery) Active Discharge time period:PV will power the loads firstly ,and surplus power will feed-in to the grid. (PV<Load ,PV → Load → Grid) ② When the power of PV is insufficient Active Charging time period :PV will power the loads firstly, the remaining power will be taken from the grid. The battery will not discharge.(PV>Load,PV + Grid → Load) Discharge time period: PV+BAT will power the loads together. If the power is still not enough, the remaining power will be taken from the grid. (PV<Load ,PV + Battery + Grid → Load) ③ Without PV power Active Charging time period :The grid will power the home loads and also charge the battery. (PV=0 , Grid → Load + Battery) Active Discharge time period :The battery will power the home loads firstly .If the battery power is not enough,the remaining power will be taken from the grid .The inverter will enter into the standby state.(PV=0 , Battery+Grid → Load) Battery min SOC can be set:10%-100%
Backup mode	The back-up mode is suitable for areas with frequent power outages.Same working logic with "Self-use" mode.This mode will maintain the battery capacity at a relatively high level.(Users' setting) to ensure that the emergency loads can be used when the grid is off. Customers no need to worry about the battery capacity. Battery min SOC can be set:30%-100%.Backup mode SOC adjustment range :30%-100%;In Backup mode, SOC-min under off-grid condition is 10%, which cannot be modified.
Off-grid	The off-grid mode is used when the power grid is off .System will provides emergency power through PV and batteries to supply power to the household loads. (Battery is necessray) ① When the power of PV is sufficent PV will power the loads firstly, and surplus power will charge to the battery.(PV>Load ,PV → Load → Battery) ② When the power of PV is insufficient The remaining power will be taken from the battery.(PV<Load ,PV → Load) ③ Without PV power The battery will power the emergency loads until the battery reached the min SOC,then the inverter will enter into the idle mode.(PV=0, Battery → Load)

IX Start Inverter

Start inverter

➢ After the inverter is checked, the inverter will take the following steps:

Applies to most countires

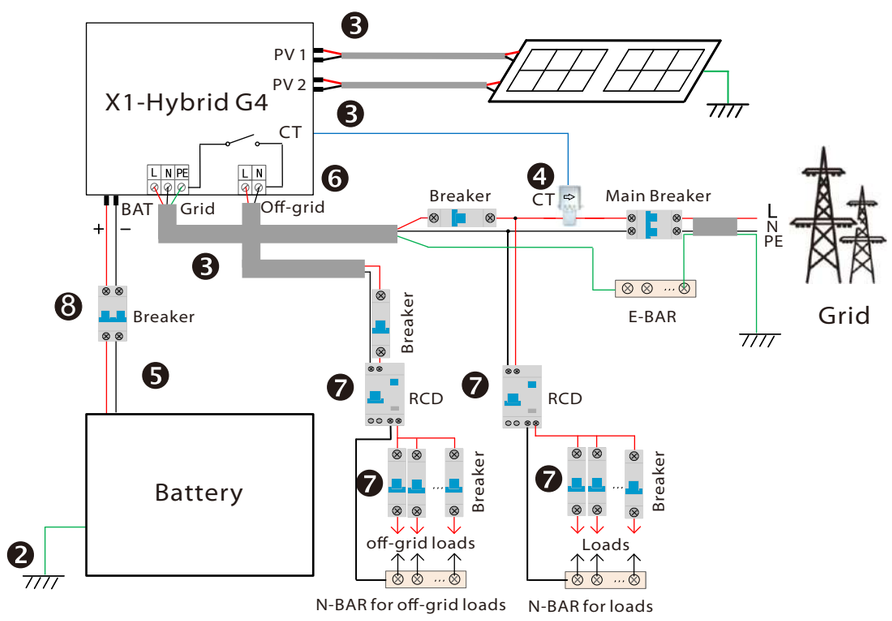

❶ Make sure that the inverter is fixed on the wall.
❷ Ensure that all ground wires are grounded.
❸ Confirm that all DC lines and AC lines are connected.
❹ Make sure the CT is connected.
❺ Make sure the battery is well connected.
❻ Ensure that the external Off-grid contactor is well connected. (If needed)
❼ Turn on the Load switch and Off-grid switch
❽ Turn on thebattery switch.

Long press Enter for 5 seconds to exit the shutdown mode. Mode is the mode when it is turned off for the first time; factory default: off mode)

X Firmware Upgrading

-In order to upgrade the firmware smoothly, if the DSP and ARM firmware needs to be upgraded, please note that ARM firmware must be upgraded first, then DSP firmware!
-Make sure that this directory is completely consistent with the above table, do not modify the firmware file name,Otherwise, the inverter may not work!
-For X1-Hybrid G4, ensure that the PV input voltage is greater than100V (upgrade on sunny days). please ensure that the battery SOC is greater than 20% or the battery input voltage is greater than 90V. Otherwise, it may cause serious failure during the upgrade process!
-If the ARM firmware upgrade fails or stops, please do not unplug the U disk and power off the inverter and restart it. Then repeat the upgrade steps.

➢ Upgrade preparation

1) Please check the inverter version and prepare a U disk (USB 2.0) and personal computer before upgrading.
2) Please contact our service support through service@solaxpower.com to obtain the firmware, and store the firmware in the U disk according to the following path.

Update:
For ARM file: "update \ARM\618.00361.00_Hybrid_X1G4_ARM_V1.01.0710.usb" ;
For DSP file: "update\DSP\618.00360.00_Hybrid_X1G4_DSP_V1.01.0710.usb" ;

➢ Upgrade steps

Step 1. Please save the "Upgrade" firmware in your U disk first, and press the "Enter" button on the inverter screen for 5 seconds to enter the OFF mode.

Step 2. Locate the "update" port of the inverter, use a flat-blade screwdriver or coin with the same width to remove the waterproof cover, and insert the U disk.

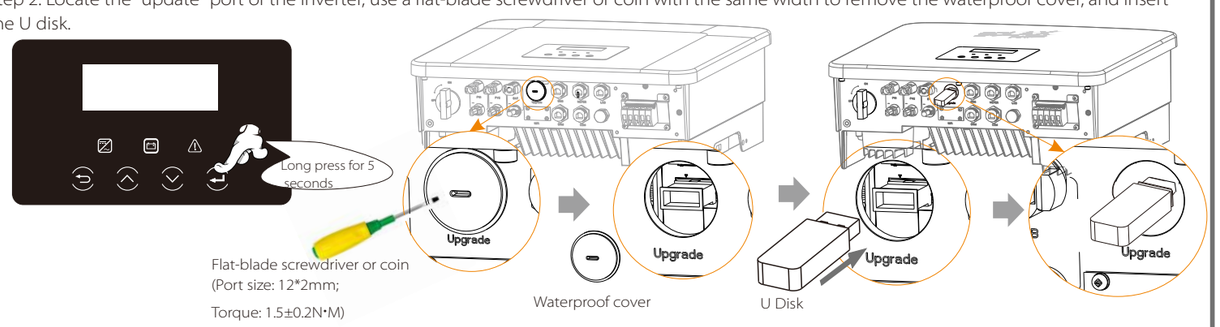

Step 3. LCD operation, enter the upgrade interface "update", as shown below(a): Please press the up and down keys to select ARM, then press the bottom of the page to select "OK", press the enter key to enter the software version interface ;

```
====Update ARM File ====
>ARM
 DSP
```
(a)

```
=== Update ARM ===
 Cancel
>OK
```
(b)

```
=== Update9( ARM) ===
>618.00361.00_Hybrid_
X1G4_ARM_V1.01
0710.usb
```
(c)

```
==== Update ( ARM) ====
Upgrading---------25%
```
(d)

```
==== Update (ARM ) ====
>ARM
 DSP
```
(e)

Step 4. Please confirm the new firmware version again and select the firmware to upgrade. The upgrade takes about 20 seconds.(d) When it is completed, the LCD screen returns to the "Update" page.

```
====Update Selection ====
 ARM
>DSP
```
(f)

```
=== Update DSP File ===
>618.00360.00_Hybrid_
X1G4_DSP_V1.01_07
10.hex
```
(g)

```
====Update(DSP) ====
connect---------
```
(h)

```
===Update(DSP) ===
DSP Erasing---------
```
(i)

```
====Update(DSP) ====
Upgrading---------25%
```
(j)

```
=== Update(DSP) ===
Upgrade Successful
```
(k)